1. Casting mechanism

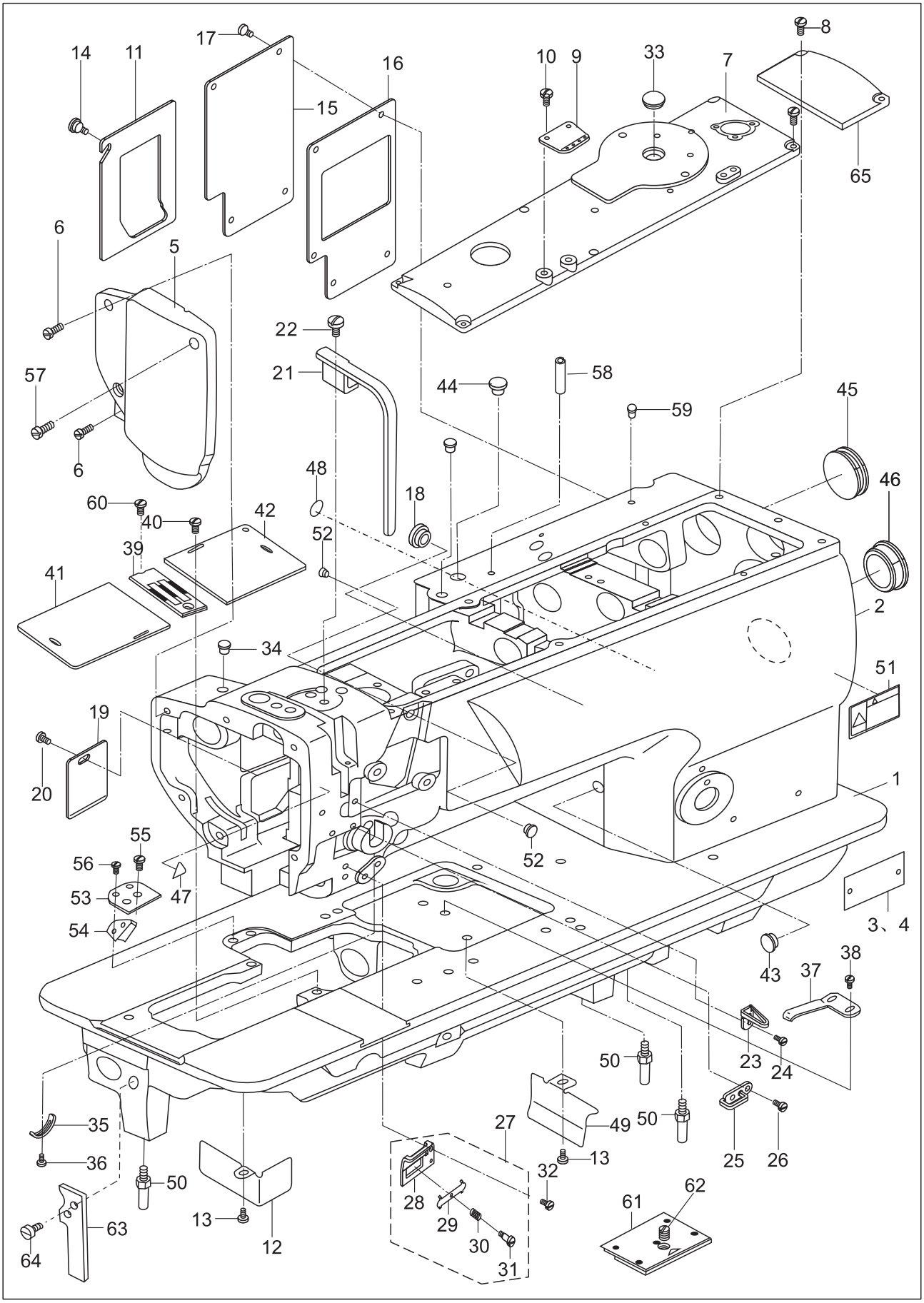

1. Casting mechanism

No.	Parts No.	Name of parts	Qty.	Remarks
1	220WF2-001	Bed	1	
2	220WF2-002	Arm	1	
3	220WF2-003A	Model plate	1	
	226WF1-001A	Model plate	1	
	244WF1-001A	Model plate	1	
4	220WF2-003B	Model plate	1	
	226WF1-001B	Model plate	1	
	244WF1-001B	Model plate	1	
5	92WF2-003	Face plate assy.	1	
6	1WF5-039	Screw	2	
7	220WF2-004	Top cover	1	
8	21WF4-047	Screw	10	SM11/64"×40
9	199WF2-017	Upper thread guide	1	
10	21WF1-062	Screw	1	SM3/16"×32
11	92WF2-007	Cover (2)	1	
12	199WF2-003	Side cover	1	
13	21WF4-047	Screw	2	SM11/64"×40
14	92WF2-008	Screw	1	
15	199WF2-020	Back cover	1	
	119WF2-004	Back cover	1	
16	199WF2-019	Seal	1	
17	1WF1-011	Screw	6	SM11/64"×40
18	92WF2-030	Rubber plug	2	
19	92WF2-011	Cover plate	1	
20	1WF1-011	Screw	1	SM11/64"×40
21	92WF2-004	Thread take-up lever cover	1	
22	13WF2-045	Screw	1	SM15/64"×28
23	92WF2-013	Thread guide	1	
24	36WF1-016	Screw	1	SM9/64"×40
25	92WF2-014	Thread guide	1	
26	1WF1-007	Screw	2	SM9/64"×40
27	92WF2-015	Lower thread guide assy.	1	
28	92WF2-015A	Thread guide	1	
29	92WF2-015B	Plate	1	
30	92WF2-015C	Spring	1	
31	92WF2-015D	Screw	1	SM9/64"×40
32	1WF1-007	Screw	1	SM9/64"×40
33	17WF1-009	Rubber plug	1	
34	92WF2-029	Rubber plug	2	
35	50WF2-022	Plate for take-up spring	1	
36	1WF1-026	Screw	1	SM9/64"×40
37	199WF2-004	Leaf spring	1	
38	2KT5-005	Screw	2	SM11/64"×40

1. Casting mechanism

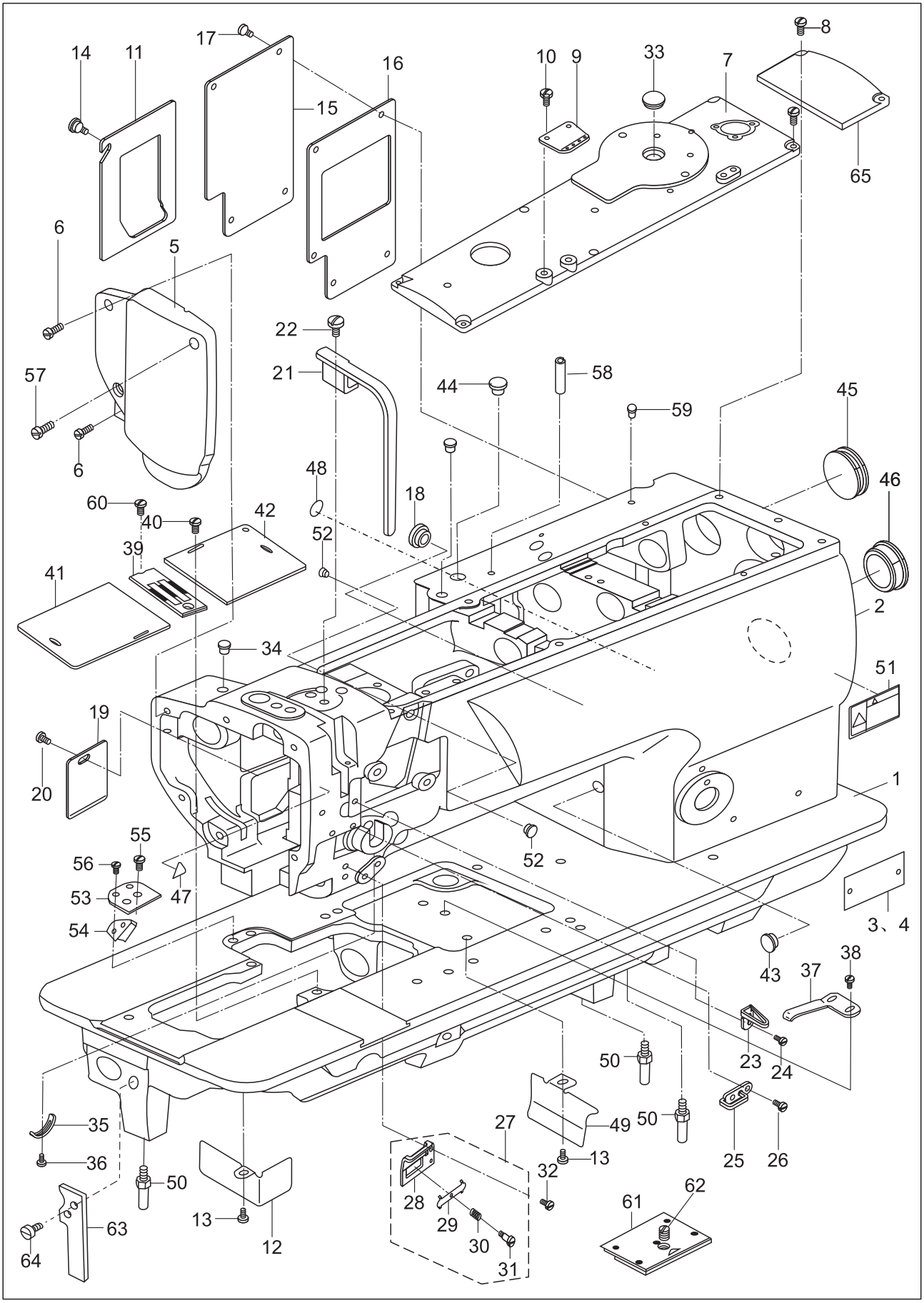

1. Casting mechanism

No.	Parts No.	Name of parts	Qty.	Remarks
39	199WF2-005	Needle plate	1	
40	199WF2-006	Screw	2	
41	199WF2-007	Sliding plate (L)	1	
42	199WF2-008	Sliding plate (R)	1	
43	92WF2-028	Rubber plug	1	
44	92WF2-028	Rubber plug	1	
45	92WF2-032	Rubber plug	1	
46	92WF2-031	Rubber plug	1	
47	59WF1-010	Caution mark	1	
48	21WF4-050	Ground wire mark	1	
49	199WF2-009	Oil stop plate(L)	1	
50	199WF2-010	Screw	3	
51	1KT1-005	Caution label	1	
52	199WF2-011	Rubber plug	2	
53	199WF2-012	Auxiliary cover	1	
54	199WF2-013	Plate	1	
55	50WF2-031	Screw	2	
56	199WF2-014	Screw	2	SM9/64"×40
57	26210	Screw	1	SM15/64"×28
58		Pin	1	GB/T 879.1 4.5×20
59	199WF2-015	Rubber plug	2	
60	204WF2-004	Screw	1	
61	204WF2-007	Slide plate(front)	1	
62	21WF4-064	Screw	1	
63	204WF2-008	Support plate	1	
64	7KT4-030	Screw	2	
65	220WF2-005	Cover	1	

2. Arm shaft & thread take-up mechanism

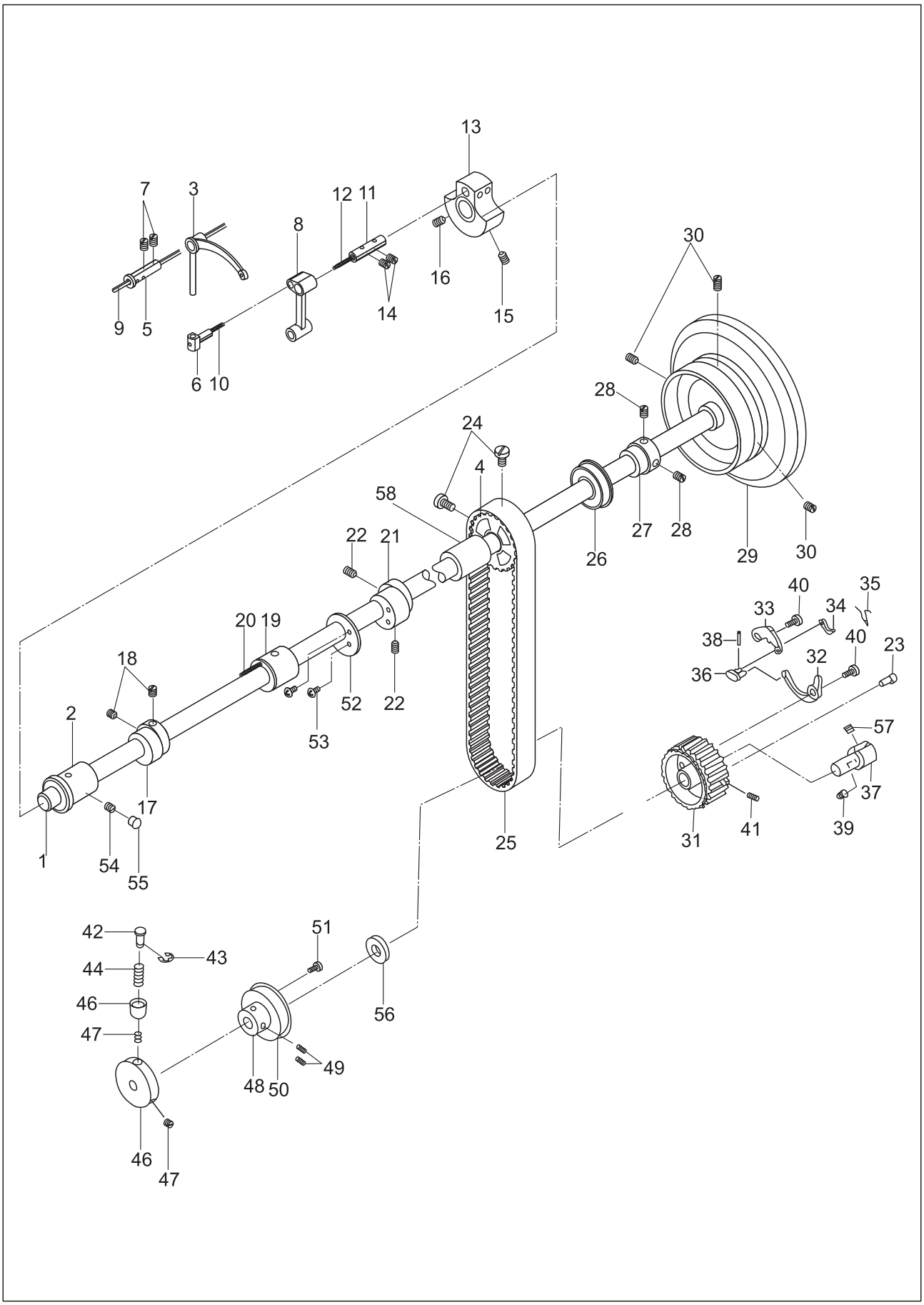

2. Arm shaft & thread take-up mechanism

No.	Parts No.	Name of parts	Qty.	Remarks
1	220WF1-001	Arm shaft	1	
2	92WF1-009	Left bushing, arm shaft	1	
3	199WF1-001	Thread take-up lever	1	
4	199WF1-002	Synchronized pulley assy. U	1	
5	16WF1-010	Pin shaft	1	
6	50WF1-006	Slide block	1	
7	1WF50-019	Screw	2	SM15/64"×28
8	92WF1-006	Needle bar link	1	
9	199WF1-003	Oil wick	1	Φ2.5×450
10	199WF1-004	Oil wick	1	Long30
11	50WF1-008	Pin	1	
12	199WF1-005	Oil wick	1	Φ7×30
13	92WF1-007	Needle bar crank	1	
14	1WF5-019	Screw	2	SM15/64"×28
15	50WF1-013	Screw	1	SM9/32"×28
16	20T2-007	Screw	1	SM9/32"×28
17	92WF3-014	Feed cam	1	
18	1WF2-010	Screw	2	SM1/4"×40
19	220WF1-007	Middle bushing, arm shaft	1	
20	199WF1-006	Oil wick	1	Φ2×150
21	92WF3-029	Feed eccentric cam	1	
22	1WF2-010	Screw	2	SM1/4"×40
23	22WF1-015	Pin	1	
24	92WF1-014	Screw	2	
25	92WF1-034	Synchronized belt	1	
26	36WF3-019A	Bearing, arm shaft	1	50105 25×47×12
27	92WF1-011	Bushing	1	
28	57WF-009	Screw	2	M6
29	92WF1-015	Hand wheel	1	
30	42WF3-007	Screw	2	
31	110WF1-017	Synchronized pulley assy. L	1	
32	22WF1-013	Clutch plate	1	
33	22WF1-018	Stop plate	1	
34	22WF1-016	plate	1	
35	22WF1-014	Twist spring	1	
36	22WF1-017	Link	1	
37	103614	Bushing	1	
38	B225001	Pin	1	GB91-86 1.2×8

2. Arm shaft & thread take-up mechanism

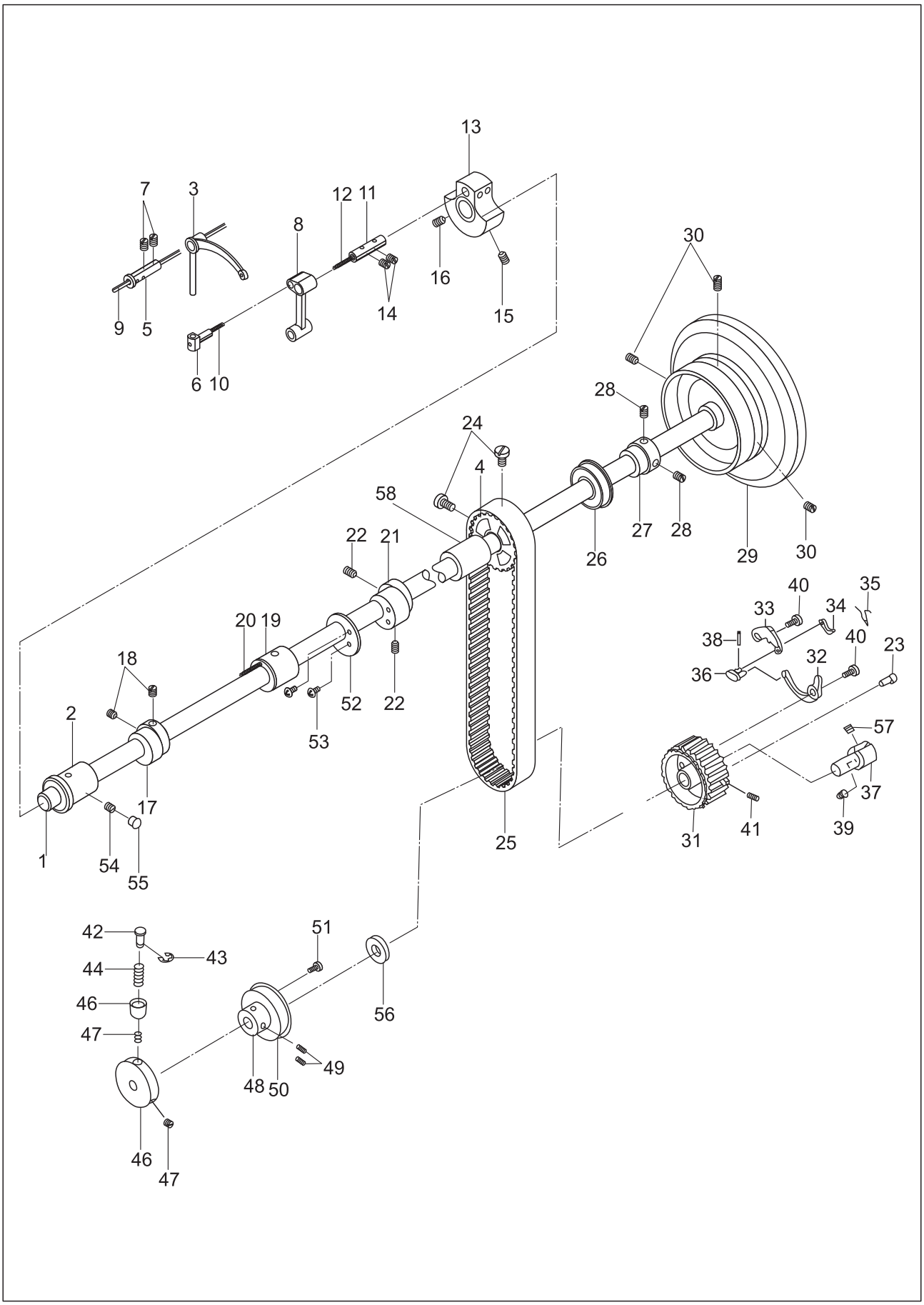

2. Arm shaft & thread take-up mechanism

No.	Parts No.	Name of parts	Qty.	Remarks
39	22WF1-052	Screw	1	SM1/4"×40
40	22WF1-019	Screw	2	
41	22WF1-020	Screw	2	
42	199WF1-020	Push button	1	
43		Retaining ring	1	GB896 5
44	199WF1-021	Spring	1	
45	199WF1-022	Bushing	1	
46	199WF1-023	Wheel	1	
47	18227	Screw	1	SM1/4"×40
48	199WF1-024	Collar	2	
49	21WF1-022	Screw	1	SM1/4"×40
50		Ball bearing	2	50104 20×42×12
51	199WF1-025	Screw	1	
52	92WF3-030	Retaining block	2	
53	7WF5-017	Screw	1	SM11/64"×40
54	1WF5-019	Screw	2	SM15/64"×28
55	92WF2-029	Rubber plug	1	
56	199WF1-026	Washer	2	
57	22WF1-012	Screw	1	
58	220WF1-007	Bushing(R), arm shaft	1	

3. Needle bar rocking frame mechanism

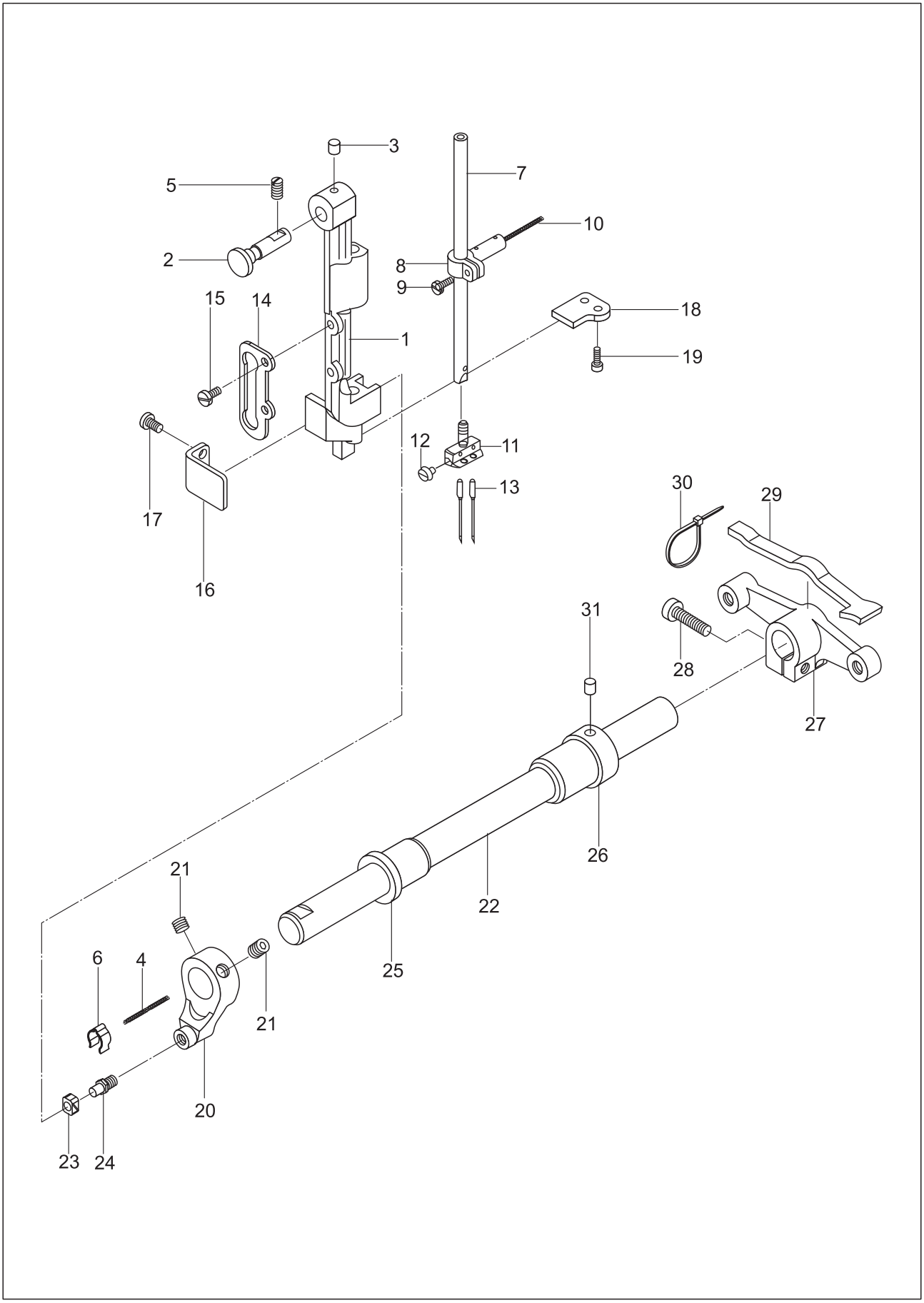

3. Needle bar rocking frame mechanism

No.	Parts No.	Name of parts	Qty.	Remarks
1	204WF3-001	Needle bar rocking frame	1	
2	92WF3-009	Pin	1	
3	92WF3-007	Oil felt	1	
4	199WF3-001	Oil wick	1	Φ2×160
5	42WF3-007	Screw	1	
6	92WF3-003	Leaf spring	1	
7	204WF3-002	Needle bar	1	
8	204WF3-008	Needle bar joint	1	
9	36WF3-029B	Screw	1	
10	199WF3-002	Oil wick	1	Φ6×20
11	1WF2-003	Needle clamp	1	
12	204WF3-005	Screw	1	SM9/64"×40
13		Needle	1	DP×17 24#
14	50WF3-030	Guide rail	1	
15	1WF1-011	Screw	2	SM11/64"×40
16	92WF3-011	Position plate (2)	1	
17	W01111	Screw	2	SM11/64"×40
18	92WF3-010	Position plate (1)	1	
19	21WF1-054	Screw	2	SM91/64"×40
20	92WF3-002A	Crank	1	
21	92WF3-070	Screw	2	
22	220WF3-001	Rocking shaft	1	
23	92WF3-004	Slide block	1	
24	92WF3-002B	Pin	1	
25	92WF3-005	Bushing , L	1	
26	92WF3-006	Bushing, R	1	
27	92WF3-012	Crank	1	
28	52WF1-050	Screw	1	
29	92WF3-013	Oil felt	1	
30	2KT-001A	Band	1	
31	92WF3-007	Oil felt	1	

4. Upper feed mechanism

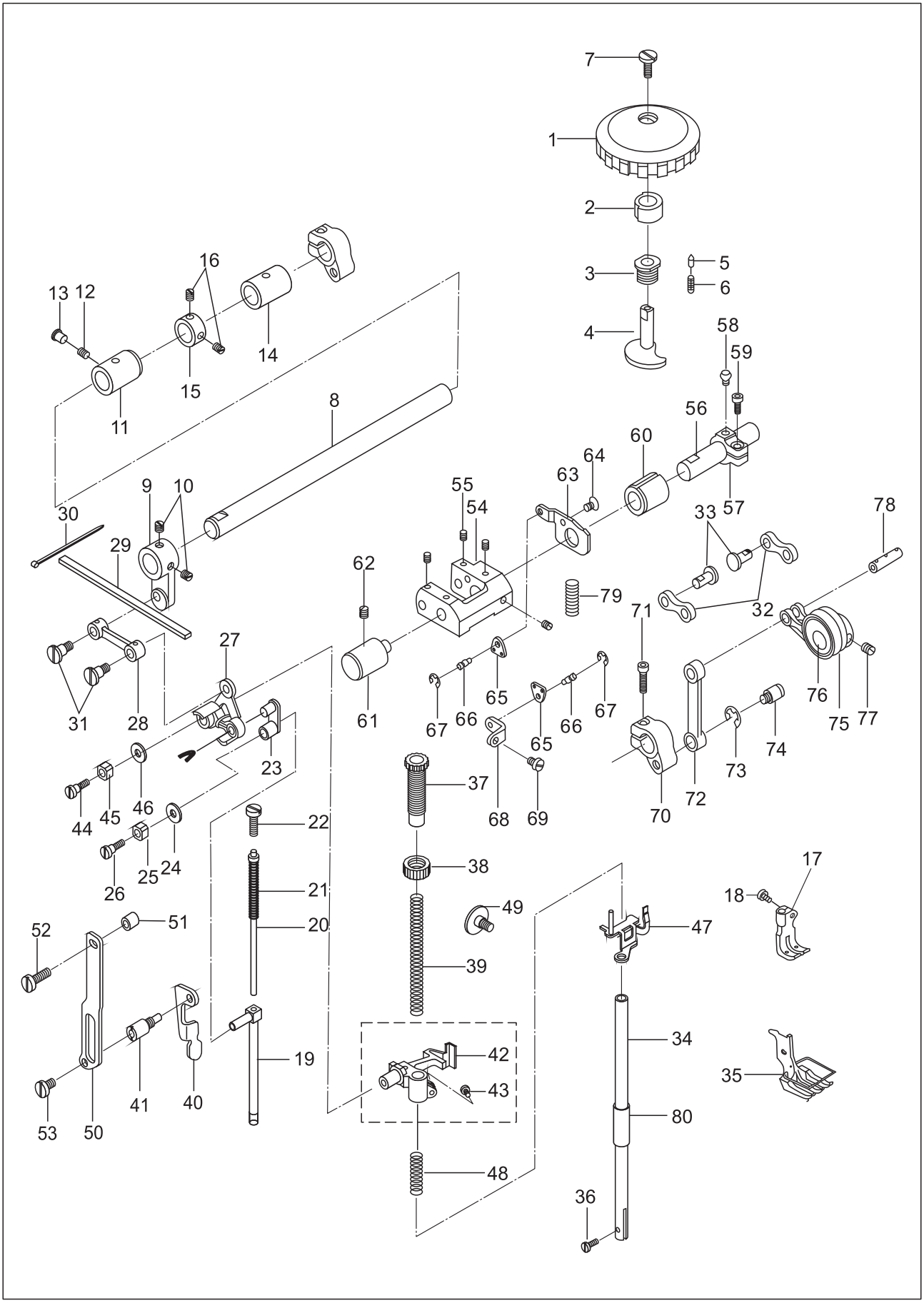

4. Upper feed mechanism

No.	Parts No.	Name of parts	Qty.	Remarks
1	119WF7-017A	Dial	1	
2	119WF7-017B	Bushing	1	
3	119WF7-019	Bushing	1	
4	119WF7-018	Shaft	1	
5	994131	Pin	1	
6	93WF8-002	Spring	1	
7	302395	Screw	1	
8	92WF3-018	Shaft	1	
9	92WF3-019	Crank	1	
10	2KT5-027	Screw	2	SM1/4"×40
11	199WF4-001	Front bushing	1	
12	1WF5-019	Screw	1	SM15/64"×28
13	92WF2-029	Rubber plug	1	
14	92WF3-021	Rear bushing	1	
15	92WF3-022	Collar	1	
16	22T3-002B2	Screw	2	SM1/4"×40
17	204WF4-001	Walking foot	1	
18	50WF3-020	Screw	1	
19	50WF3-018	Walking foot lifting bar	1	
20	92WF3-024	Spring guide bar assy.	1	
21	50WF3-032	Spring	1	
22	6K1-048	Regulating screw	1	SM15/64"×28
23	50WF3-027	Link	1	
24	50WF3-028	Felt	1	
25	50WF3-029	Slide block	1	
26	20T4-006	Screw	1	SM11/64"×40
27	92WF3-025	Lifting plate	1	
28	92WF3-026	Link	1	
29	92WF3-027	Oil felt	1	
30	2KT7-001A	Band	2	
31	92WF3-028	Screw	2	
32	119WF7-011	Link	2	
33	994118	Pin shaft	2	
34	22WF3-005	Presser bar	1	
35	204WF4-022	Presser foot	1	
36	22WF3-014	Screw	1	SM9/64"×40
37	02WF4-003	Screw	1	SM1/2"×28
38	1KT4-002	Nut	1	SM1/2"×28
39	92WF4-023	Spring	1	
40	92WF4-004	Foot lift lever	1	
41	92WF4-005	Lift lever shaft	1	

4. Upper feed mechanism

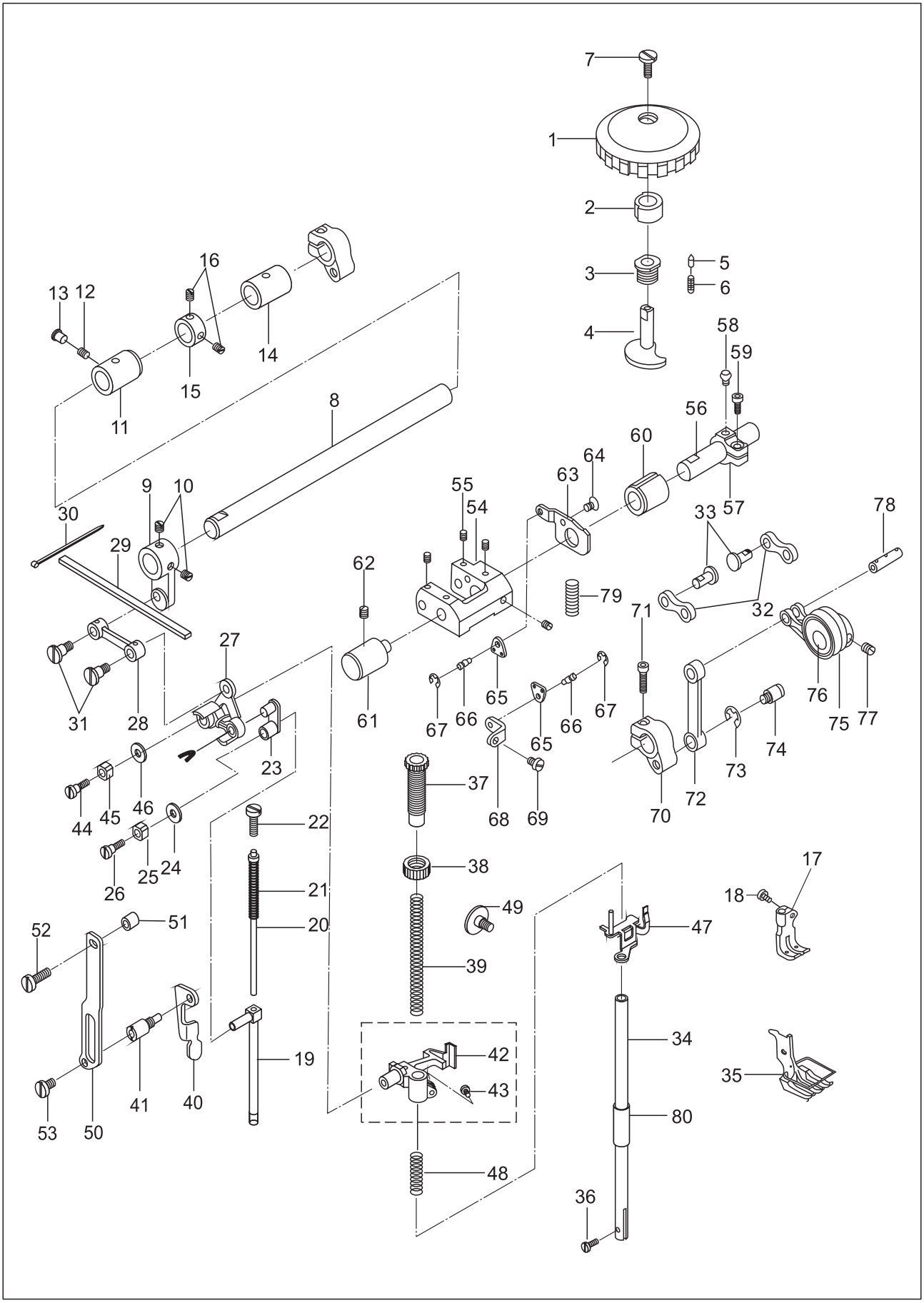

4. Upper feed mechanism

No.	Parts No.	Name of parts	Qty.	Remarks
42	92WF4-006	Bracket	1	
43	1WF1-011	Screw	1	SM11/64"×40
44	92WF4-007	Screw	1	
45	50WF3-029	Slide block	1	
46	92WF4-008	Washer	1	
47	92WF4-009	Releasing plate	1	
48	50WF4-013	Spring	1	
49	50WF4-014	Screw	1	
50	92WF4-010	Guide plate	1	
51	92WF4-011	Washer	1	
52	60WF4-003	Screw(U)	1	SM15/64"×28
53	52WF3-027	Screw(L)	1	SM15/64"×28
54	119WF7-001	Adjusting bracket	1	
55	6K2-043	Screw	4	
56	119WF7-003	Shaft	1	
57	119WF7-004	Crank	1	
58	119WF7-005	Screw	1	
59	72WF5-021	Screw	1	
60	119WF7-002	Bushing	1	
61	92WF3-037	Shaft	1	
62	1WF5-019	Screw	1	SM15/64"×28
63	119WF7-012	Retaining plate	1	
64		Screw	1	GB/T819.2 M5×8
65	119WF7-014	Connecting plate	2	
66	119WF7-015	Screw	2	
67		Retaining ring	2	GB896 5
68	119WF7-016	Hanger	1	
69	50WF3-089	Screw	1	
70	119WF7-009	Crank	1	
71	80WF6-025	Screw	1	
72	119WF7-008B	Link	1	
73		Retaining ring	1	GB896 8
74	119WF7-010	Screw	1	
75	119WF7-008A	Link	1	
76	119WF7-007	Needle bearing	1	
77	21WF1-022	Screw	1	
78	119WF7-008C	Pin shaft	1	
79	119WF7-013	Spring	1	
80	50WF4-001	Bushing	1	

5. Lower feed, reverse and feed regulating

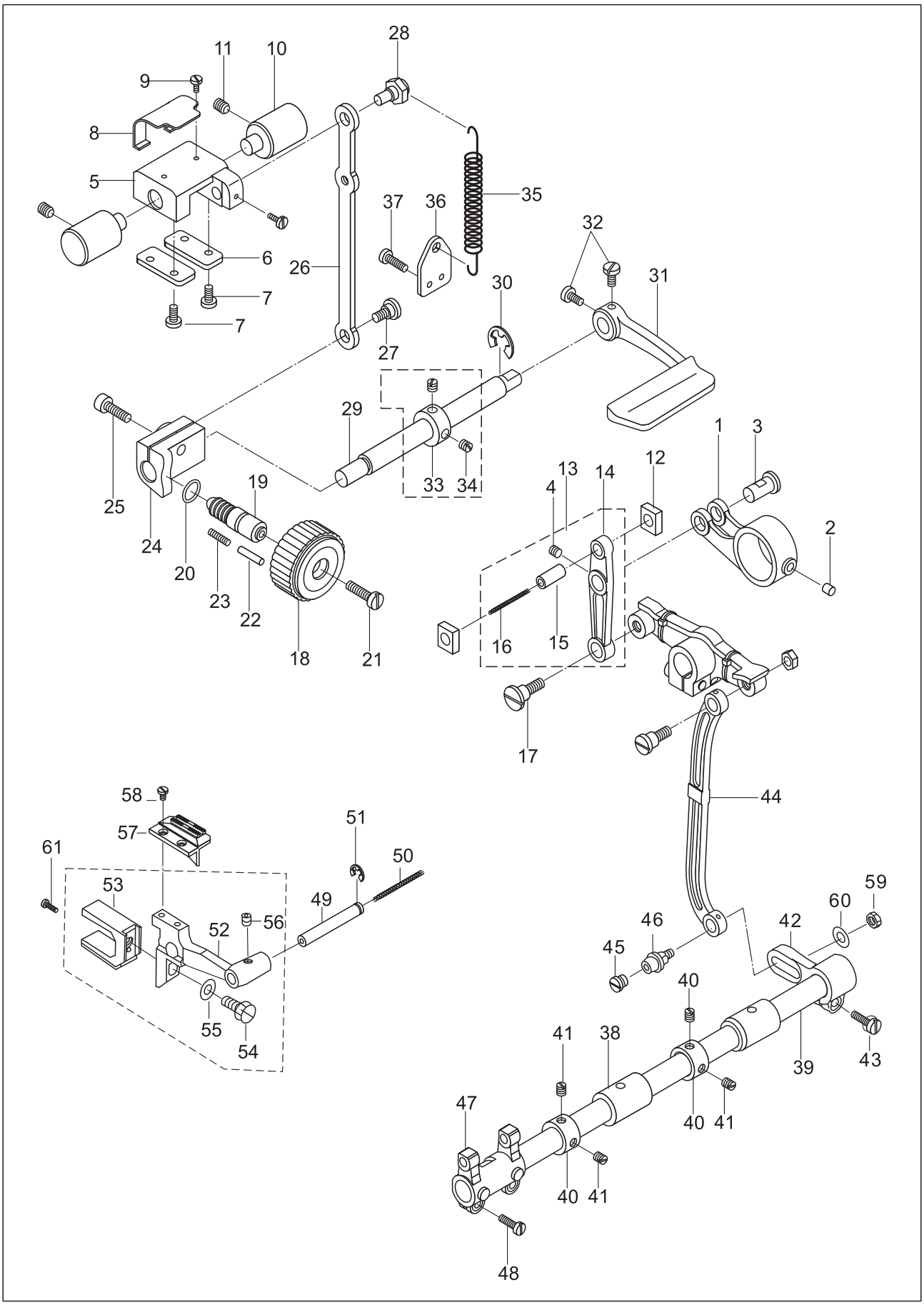

5. Lower feed, reverse and feed regulating

No.	Parts No.	Name of parts	Qty.	Remarks
1	92WF3-031	Feed link	1	
2	92WF3-032	Oil felt	1	
3	92WF-033	Pin	1	
4	6K2-043	Screw	1	M5
5	92WF3-034	Reverse feed bracket	1	
6	92WF3-035	Retaining plate	2	
7	1WF1-011	Screw	4	
8	92WF3-036	Presser plate	1	
9	16WF1-059	Screw	2	SM9/64"×40
10	92WF3-037	Shaft	2	
11	1WF5-019	Screw	2	SM15/64"×28
12	92WF3-038	Slide block	2	
13	92WF3-039	Feed rocking bar assy.	1	
14	92WF3-039A	Feed rocking bar	1	
15	92WF3-039B	Pin	1	
16	199WF3-003	Oil wick	1	Φ1.5×35
17	92WF3-040	Screw	1	
18	92WF3-041	Stitch regulating dial	1	
19	92WF3-042	Screw bar	1	
20	92WF3-043	Seal ring	1	
21	92WF3-044	Screw	1	SM3/16"×28
22	17WF4-035	Stop pin	1	
23	50WF3-058	Spring	1	
24	92WF3-045	Holder	1	
25	6K2-024	Screw	1	M6
26	92WF3-046	Link	1	
27	92WF3-047	Screw	1	
28	92WF3-048	Eccentric pin	1	
29	92WF3-049	Reverse feed lever shaft	1	
30	92WF3-071	Retaining ring	1	GB896 9
31	92WF3-050	Reverse feed lever	1	
32	92WF3-051	Screw	2	
33	92WF3-052	Collar	1	
34	22T3-002B2	Screw	2	SM1/4"×40
35	92WF3-053	Spring	1	
36	92WF3-054	Spring hook	1	
37	1WF3-009	Screw	2	SM11/64"×40
38	92WF3-021	Feed shaft bushing	2	

5. Lower feed, reverse and feed regulating

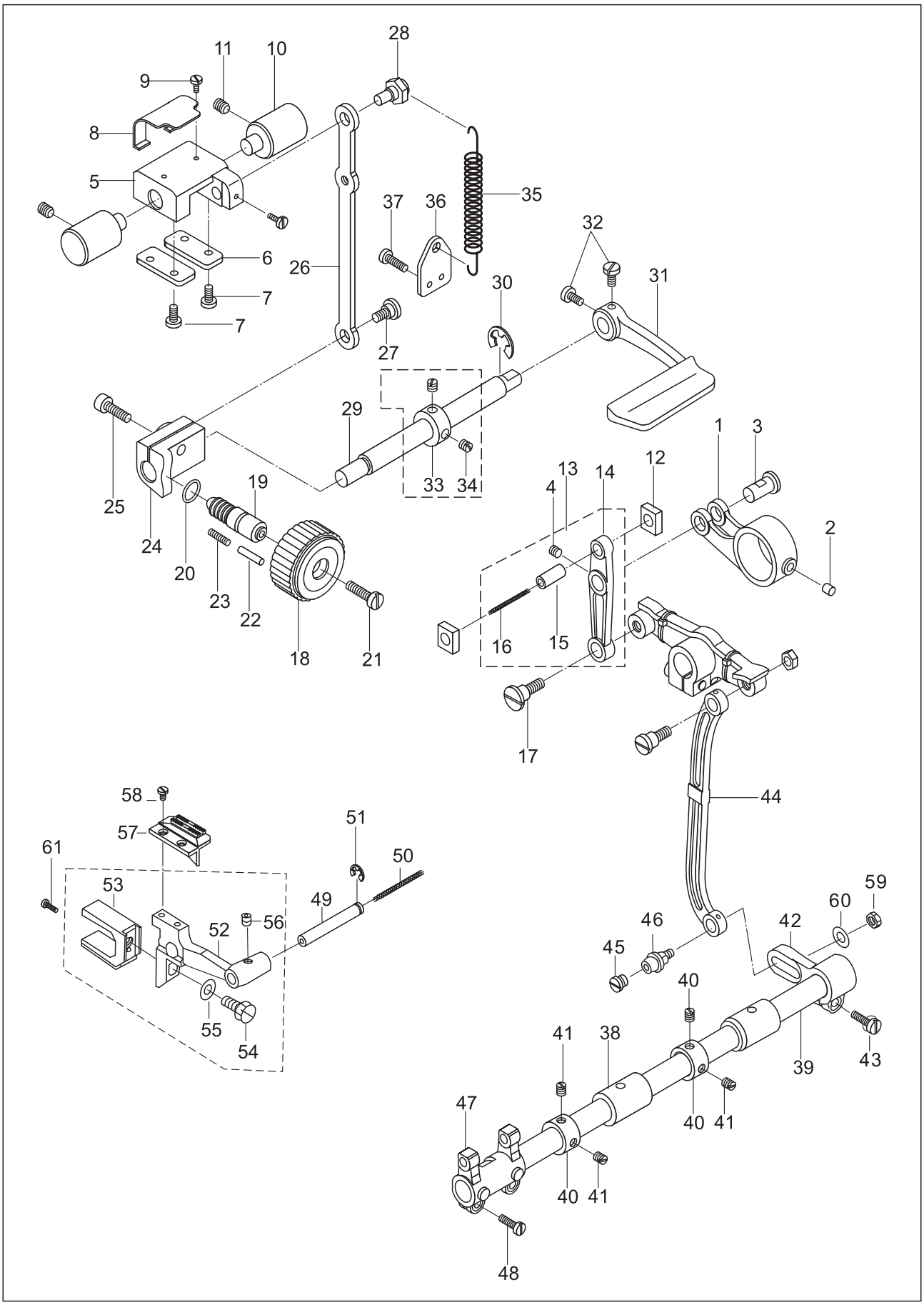

5. Lower feed, reverse and feed regulating

No.	Parts No.	Name of parts	Qty.	Remarks
39	220WF3-002	Feed shaft	1	
40	92WF3-022	Feed shaft collar	2	
41	22T3-002B2	Screw	4	SM1/4"×40
42	119WF3-001	Driving crank	1	
43	41WF3-018	Screw	1	SM3/16"×28
44	92WF3-058	Link	1	
45	119WF3-003	Screw	1	
46	119WF3-002	Screw	1	
47	92WF3-060	Feed crank	1	
48	1WF3-009	Screw	2	SM11/64"×40
49	92WF3-061	Pin	1	
50	199WF3-004	Oil wick	1	Φ2.5×120
51	92WF3-072	Retaining ring	1	GB896 5
52	199WF3-005	Feed dog support	1	
53	199WF3-006	Lifting fork	1	
54	42WF1-008	Screw	1	SM15/64"×28
55	41WF1-009	Washer	1	
56	80WF6-036	Screw	1	
57	199WF3-007	Feed dog	1	
58	199WF3-008	Screw	2	
59	22WF3-004	Nut	1	
60	71WF3-058	Washer	1	
61	13WF6-008	Screw	1	

6. Lower shaft and rotating hook

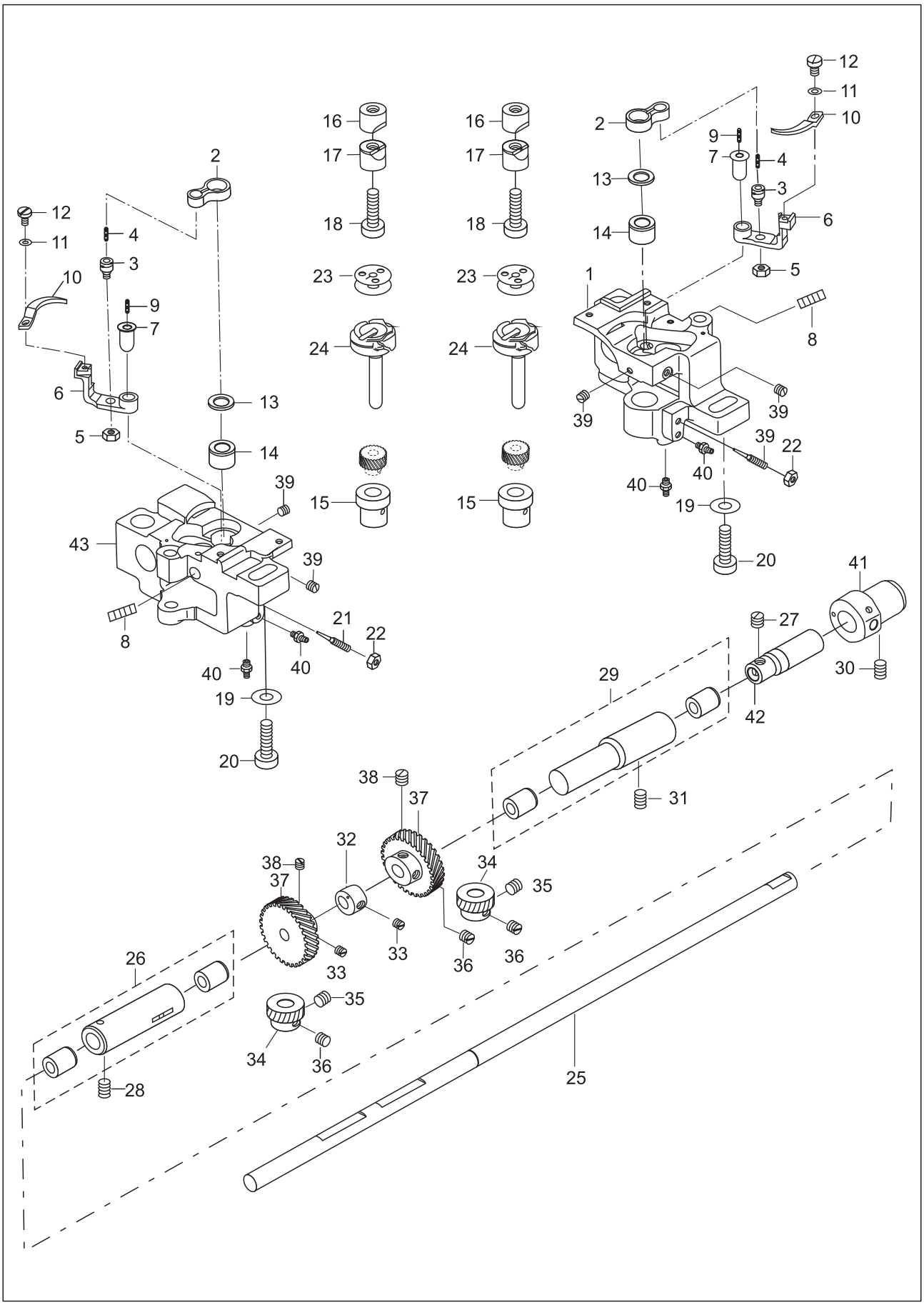

6. Lower shaft and rotating hook

No.	Parts No.	Name of parts	Qty.	Remarks
1	199WF1–027	Rotating hook saddle(R)	1	
2	199WF1–028	Thread opener link	2	
3	199WF1–029	Pin	2	
4	199WF1–030	Oil wick	2	Φ3×15
5	27WF4–008	Nut	2	
6	199WF1–031	Thread opener supporter	2	
7	199WF1–032	Shaft	2	
8	52WF2–030	Screw	2	SM11/64"×40
9	199WF1–033	Oil wick	2	Φ3×20
10	199WF1–034	Thread opener	2	
11	36WF1–042	Washer	2	
12	21WF2–038	Screw	2	SM9/64"×40
13	199WF1–035A	Washer(optional)	2	
14	199WF1–036	Upper bushing, rotating hook	2	
15	199WF1–037	Lower bushing, rotating hook	2	
16	199WF1–038	Block A	2	
17	199WF1–039	Block B	2	
18	1WF2–060	Bolt	2	
19	199WF1–040	Washer	2	
20		Bolt	2	GB/T 70.1 M8×40
21	92WF1–031	Screw	2	
22	27WF4–008	Nut	2	
23	199WF1–041	Rotating hook assy.	2	
24	1WF2–065	Bobbin	2	
25	220WF1–002	Lower shaft	1	
26	220WF1–005	Left bushing, lower shaft	1	
27	1WF2–009	Screw	1	SM1/4"×40
28	17WF4–016	Screw	1	SM15/64"×28
29	220WF1–006	Middle bushing assy., lower shaft	1	
30	17WF4–016	Screw	1	SM15/64"×28
31	17WF4–016	Screw	1	SM15/64"×28
32	204WF1–005	Feed dog lifting cam	1	
33	22WF1–022	Screw	1	SM15/64"×28
34	199WF1–046	Rotating hook shaft gear	2	
35	21WF1–033	Screw	2	SM1/4"×40
36	21WF1–043	Screw	2	SM1/4"×40
37	199WF1–047	Lower shaft gear	2	
38	1WF2–010	Screw	4	SM1/4"×40
39	36WF5–021	Screw	4	SM11/64"×40
40	199WF1–048	Oil tube connector	4	
41	199WF1–049	Bushing	1	
42	199WF1–050	Shaft, oil pump	1	
43	204WF1–002	Rotating hook saddle(L)	1	

7. Thread tension components

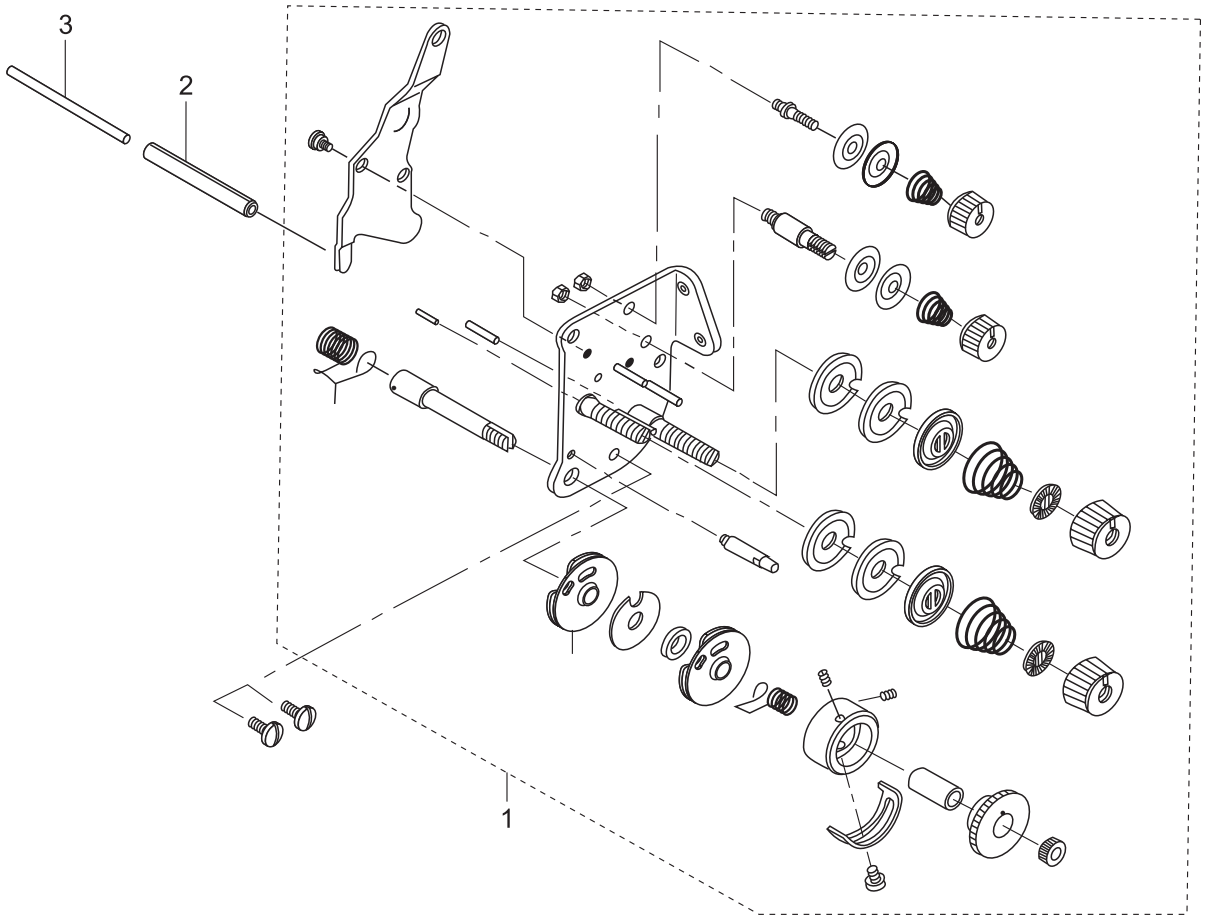

7. Thread tension components

No.	Parts No.	Name of parts	Qty.	Remarks
1	204WF2-009	Thread tension assy.	1	
2		Pin	1	GB/T 879.1 6×50
3	92WF2-020	Thread release pin	1	

8. Bobbin winder & knee lifter components

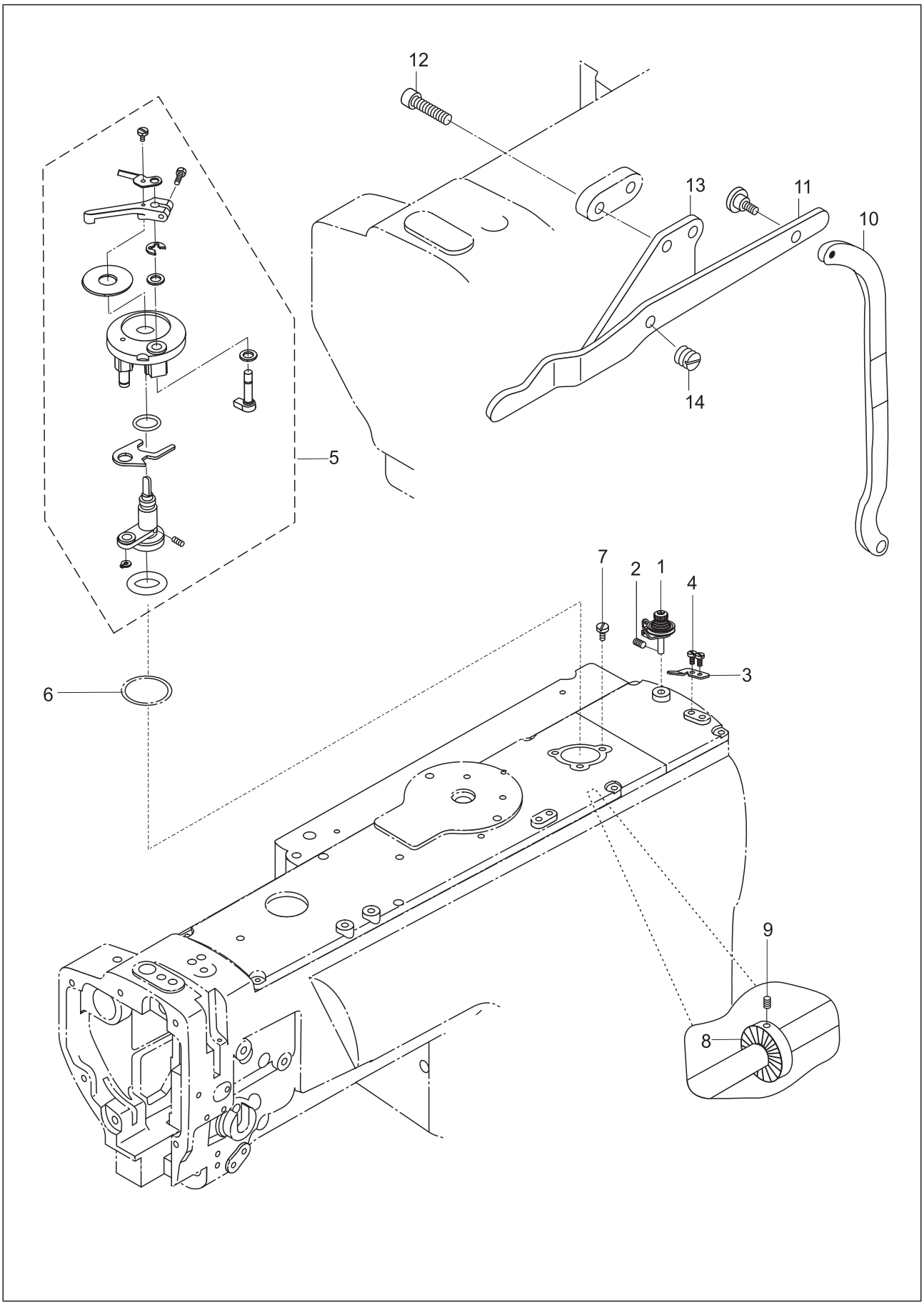

8. Bobbin winder & knee lifter components

No.	Parts No.	Name of parts	Qty.	Remarks
1	93WF17-017	Bobbin thread tension assy.	1	
2	13WF3-062	Screw	1	
3	92WF2-036	Cutter	1	
4	36WF2-031	Screw	2	
5	92WF2-025	Thread winder assy.	1	
6	92WF2-026	Seal ring	1	
7	92WF2-027	Screw	3	
8	220WF4-001	Friction wheel	1	
9	6K2-043	Screw	2	
10	199WF5-010	Knee lifter lifting link	1	GC20666L25
11	220WF4-002	Knee lifter rod	1	GC20666L25
12	72WF-009	Screw	1	GC20666L25
13	92WF4-012	Fixed plate	1	GC20666L25
14	92WF4-014	Screw	1	GC20666L25

9.Lubrication components

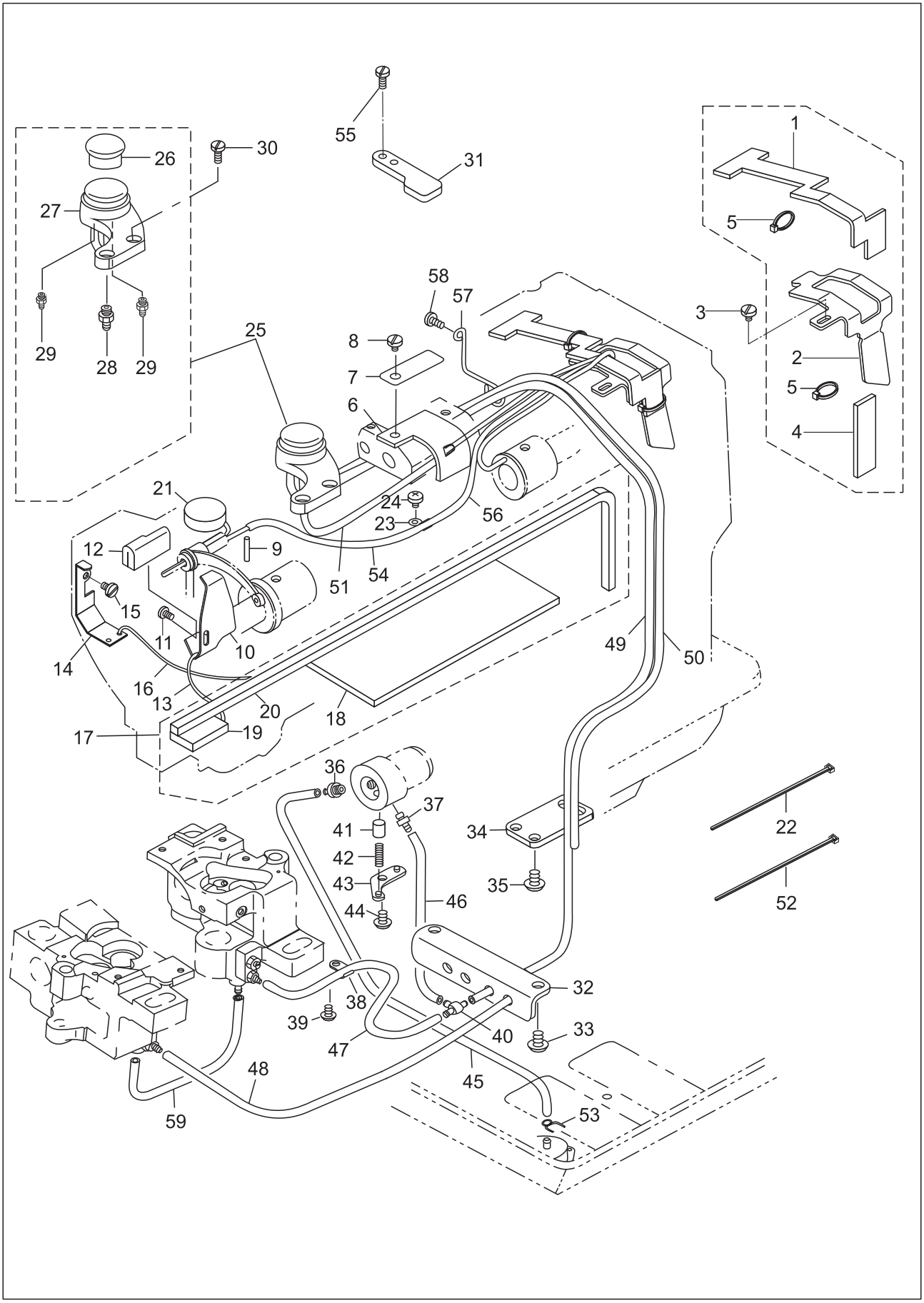

9.Lubrication components

No.	Parts No.	Name of parts	Qty.	Remarks
1	92WF5-001	Oil felt	1	
2	92WF5-002	Bracket	1	
3	1WF1-011	Screw	1	SM11/64"×40
4	92WF5-003	Oil felt	1	
5	2KT7-001A	Band	2	
6	119WF5-003	Oil felt	1	
7	119WF5-001	Plate	1	
8	119WF5-002	Screw	1	
9	92WF5-010	Oil felt	1	
10	92WF5-011	Oil shield	1	
11	16WF1-059	Screw	1	SM9/64"×40
12	92WF5-012	Oil felt	1	
13		Oil wick	1	Φ2×250
14	92WF5-013	Oil shield	1	
15	36WF1-031D	Screw	1	SM11/64"×40
16		Oil wick	1	Φ2×250
17	92WF5-014	Oil felt assy.	1	
18	92WF5-014A	Felt	1	
19	92WF5-014B	Felt	1	
20	92WF5-014C	Oil wick	1	
21	92WF5-009	Felt	1	
22	2KT7-001A	Band	1	
23	1WF6-036	Clip	1	
24	17WF1-020	Screw	1	SM11/64"×40
25	199WF6-001	Oil box assy.	1	
26	199WF6-001A	Oil window	1	
27	199WF6-001B	Oil box	1	
28	199WF6-002	Connector	1	
29	199WF1-048	Connector	2	
30	1WF5-042	Screw	2	SM11/64"×40
31	92WF5-004	Plate	1	
32	199WF6-003	Oil tube support	1	
33	27WF5-005	Screw	2	SM15/64"×28
34	199WF6-004	Supporter	1	
35	27WF5-005	Screw	2	SM15/64"×28
36	199WF6-005	Connector	1	
37	199WF1-048	Connector	1	
38	1WF6-036	clip	1	

9.Lubrication components

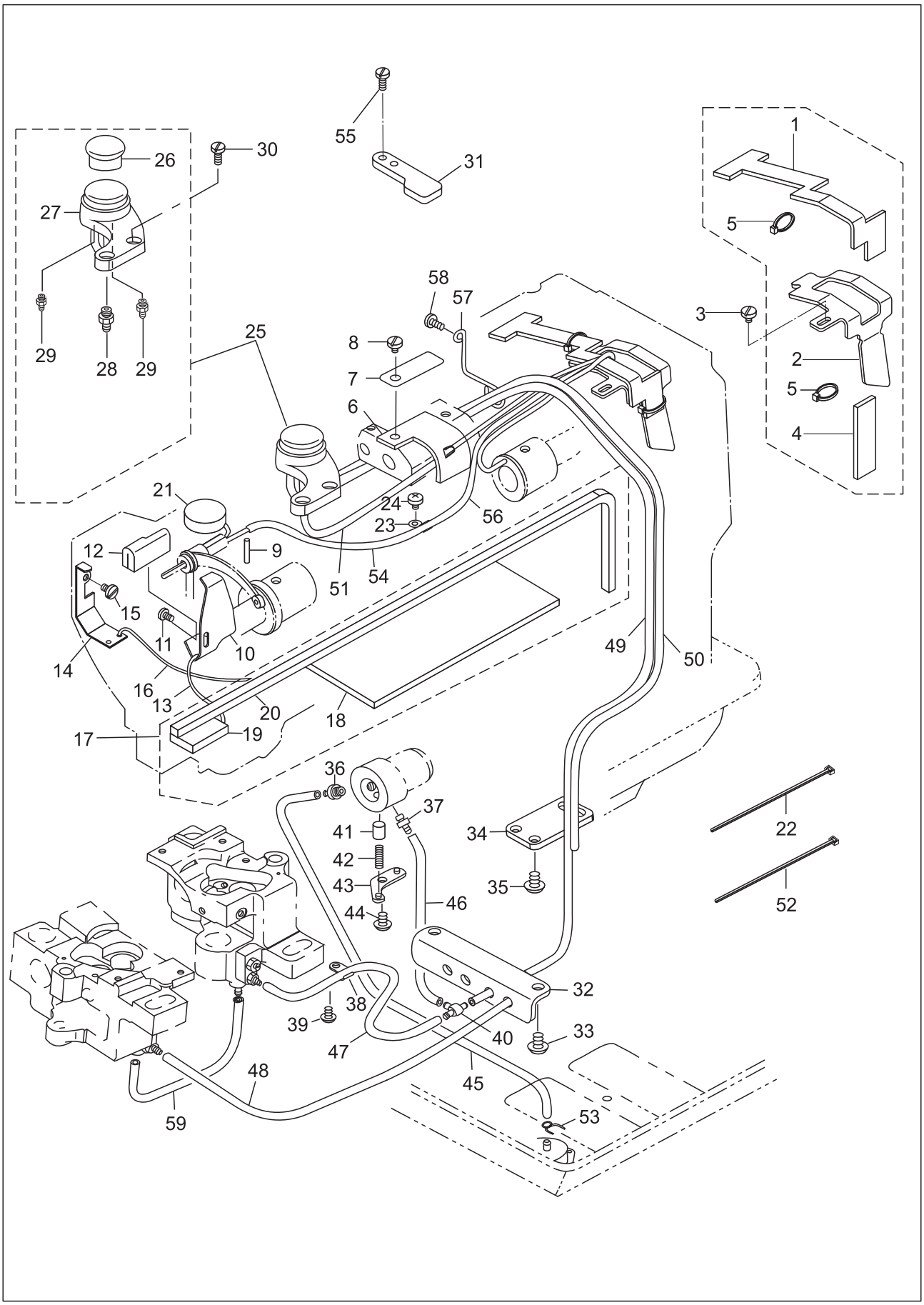

9.Lubrication components

No.	Parts No.	Name of parts	Qty.	Remarks
39	17WF1-020	Screw	1	SM11/64"×40
40	1WF6-029	Oil distributor	1	
41	199WF6-007	Plug	1	
42	199WF6-008	Spring	1	
43	199WF6-009	Plate	1	
44	17WF1-020	Screw	1	SM11/64"×40
45	199WF6-010	Oil tube	1	Φ5×1 Long370
46	199WF6-011	Oil tube	1	Φ5×1 Long80
47	220WF5-001	Oil tube	1	Φ5×1 Long620
48	220WF5-002	Oil tube	1	Φ5×1 Long700
49	220WF5-003	Oil tube	1	Φ5×1 Long1010
50	220WF-004	Oil tube	1	Φ5×1 Long900
51	199WF6-016	Oil tube	1	Φ5×1 Long200
52	2KT5-001A	Band	11	
53	199WF6-017	Clip	1	
54	199WF6-018	Oil tube	1	Φ5×1 Long225
55	W01111	Screw	2	
56	199WF6-019	Oil wick	1	Φ5×480
57	199WF6-020	Setting hook	1	
58	36WF4-017	Screw	1	
59	204WF5-001	Oil tube	1	Φ5×1 Long100

10. Thread trimming mechanism (-D2T3)

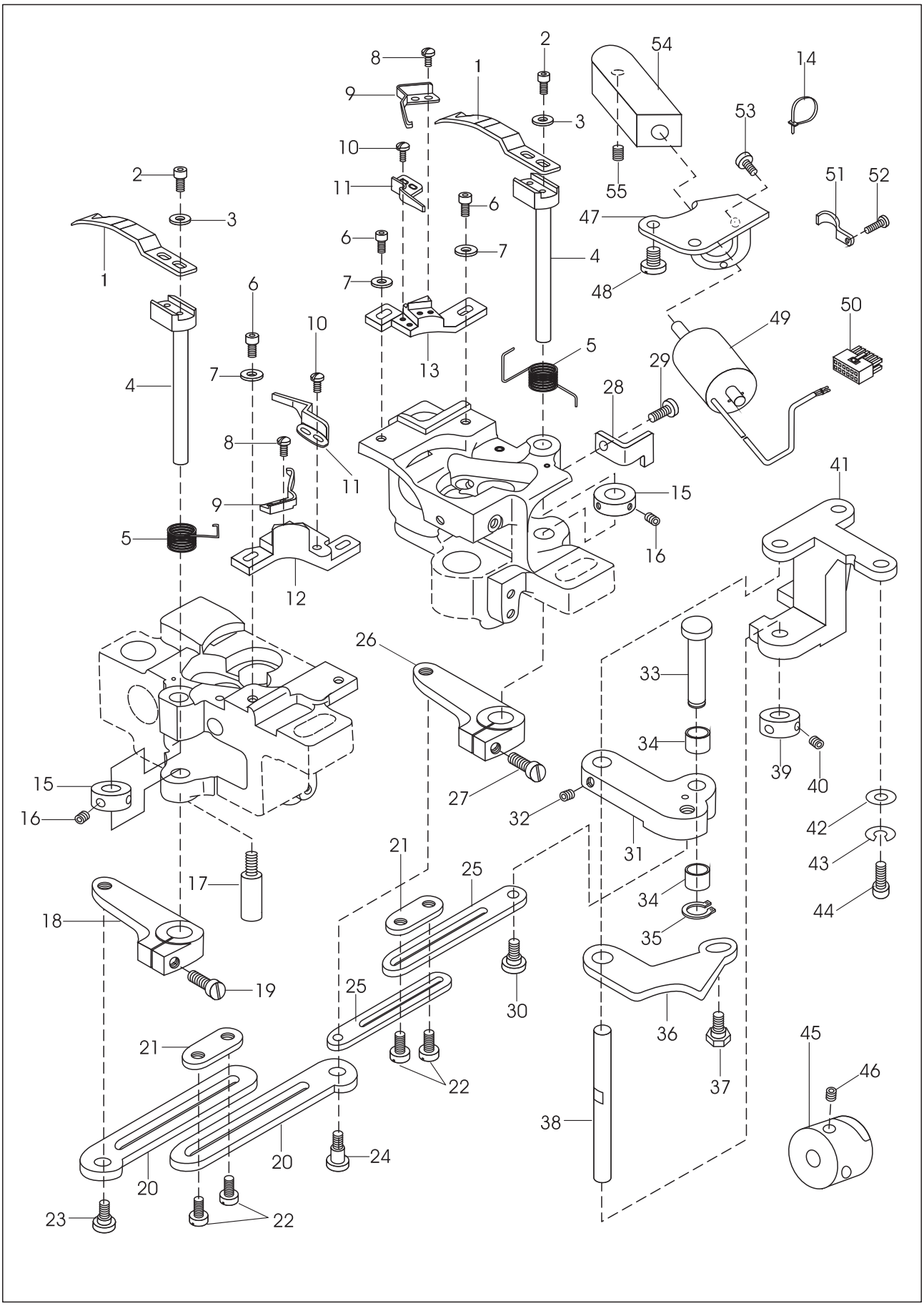

10. Thread trimming mechanism (-D2T3)

No.	Parts No.	Name of parts	Qty.	Remarks
1	228WF4-026	Movable knife	2	
2	228WF4-027	Screw	4	M3×8
3		Washer	4	GB/T97.1 3
4	228WF4-025	Movable knife driven shaft	2	
5	228WF4-028	Spring	2	
6	228WF4-035	Screw	4	SM11/64"×40
7		Washer	4	GB/T848 4
8	13WF2-062	Screw	4	SM3/32"×56
9	228WF4-032	Spring plate	2	
10	13WF2-062	Screw	4	SM3/32"×56
11	228WF4-030	Fixed knife	2	
12	228WF4-033	Fixed knife bracket(L)	1	
13	228WF4-034	Fixed knife bracket(R)	1	
14	2KT5-001a	Band	1	
15	228WF4-029	Collar	2	
16	36WF5-021	Screw	4	SM11/64"×40
17	228WF4-021	Screw bar	1	
18	228WF4-019	Crank (L)	1	
19	41WF3-018	Screw	1	SM3/16"×28
20	228WF4-018	Link	2	
21	228WF4-016	Lock plate	2	
22	228WF4-017	Screw	4	SM11/64"×40
23	228WF4-020	Screw	1	
24	228WF4-023	Screw	1	
25	228WF4-014	Link	2	
26	228WF4-022	Crank(R)	1	
27	41WF3-018	Screw	1	SM3/16"×28
28	228WF4-024	Stop plate	1	
29	1WF5-042	Screw	1	SM11/64"×40
30	228WF4-015	Screw	1	
31	228WF4-010	Driven crank	1	
32	36WF5-025	Screw	2	SM11/64"×40
33	228WF4-011	Pin shaft	1	
34	228WF4-012	Roller	2	
35		Retaining ring	1	GB896 3.5
36	228WF4-008	Driven link	1	
37	228WF4-009	Screw	1	
38	228WF4-006	Shaft	1	
39	228WF4-007	Collar	1	
40	36WF5-025	Screw	2	SM11/64"×40
41	228WF4-005	Bracket	1	
42	17WF4-012	Washer	2	
43		Spring washer	2	GB93 6
44	60WF4-003	Screw	2	SM15/64"×28

10. Thread trimming mechanism (-D2T3)

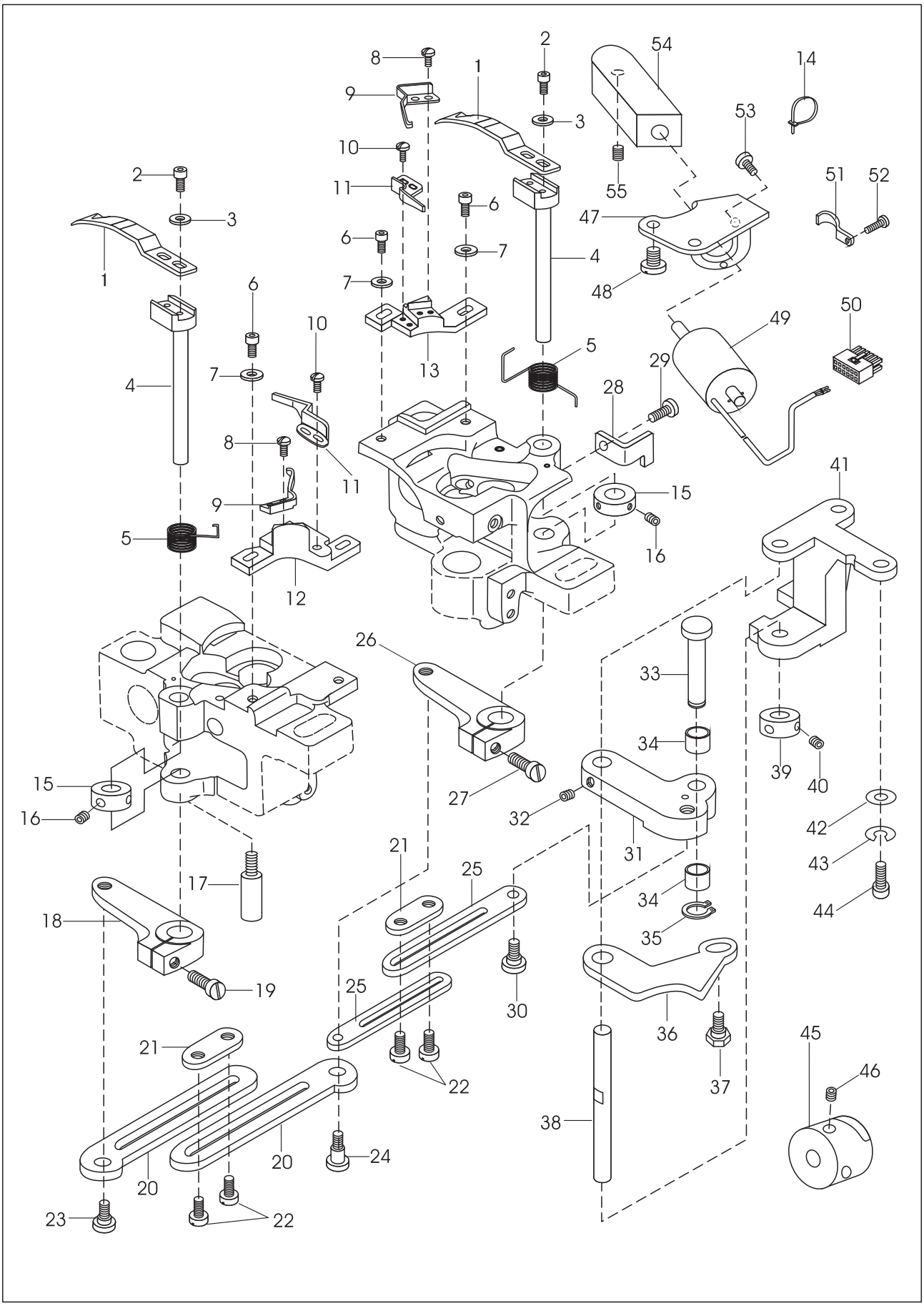

10. Thread trimming mechanism (-D2T3)

No.	Parts No.	Name of parts	Qty.	Remarks
45	228WF4-013	Trimming cam	1	
46	2KT5-027	Screw	2	SM1/4" × 40
47	228WF4-001	Solenoid installing bracket	1	
48	13WF2-045	Screw	2	SM15/64" × 28
49	228WF4-002	Trimming solenoid	1	
50	119WF8-018	Connector	1	
51	228WF4-003	Wire clamp	1	
52	52WF2-030	Screw	1	SM11/64" × 40
53	18WF3-021	Screw	2	M4 × 8
54	228WF4-004	Link block	1	
55	21WF1-060	Screw	2	SM11/64" × 40

11.Auto-reverse feed mechanism (-D1T3/-D2T3)

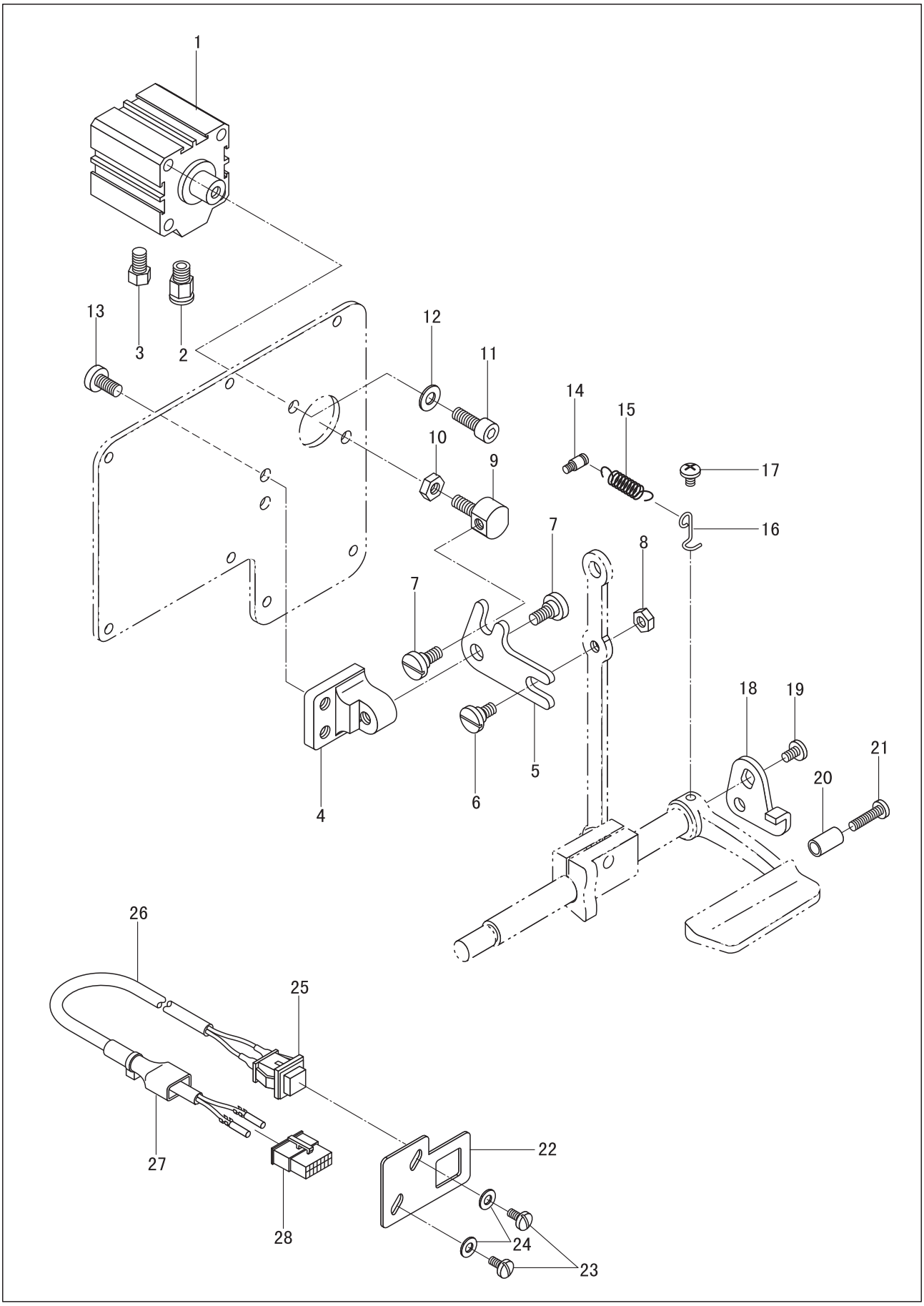

11.Auto-reverse feed mechanism (-D1T3/-D2T3)

No.	Parts No.	Name of parts	Qty.	Remarks
1	119WF8–001A	Cylinder	1	
2	119WF8–001C	Joint	1	
3	119WF8–001B	Silencer	1	
4	119WF8–004	Bracket	1	
5	119WF8–005	Driven lever	1	
6	119WF8–003	Screw	1	
7	119WF8–006	Screw	2	SM15/64" × 28
8	22WF3–004	Nut	1	
9	119WF8–002	Joint	1	
10	22T5–011A7	Nut	1	
11	52WF5–003	Screw	4	
12	72WF2–010	Washer	4	
13	36WF1–056	Screw	2	
14	119WF8–011	Screw bar	1	
15	119WF8–008	Spring	1	
16	119WF8–009	Hook	1	
17	119WF8–010	Screw	1	
18	119WF8–007	Stop plate	1	
19	22T5–010D3	Screw	1	
20	119WF8–012	Block	1	
21	36WF4–027	Screw	1	
22	119WF8–013	Button base	1	
23	22WF4–014	Screw	2	
24	2KT7–009	Washer	2	
25	119WF8–019	Reverse function button	1	
26	226WF2–001	Connector assy.	1	
27	129WF6–014	Plug cover	1	
28	119WF8–018	Plug	1	

12.Tension release mechanism (-D2T3)

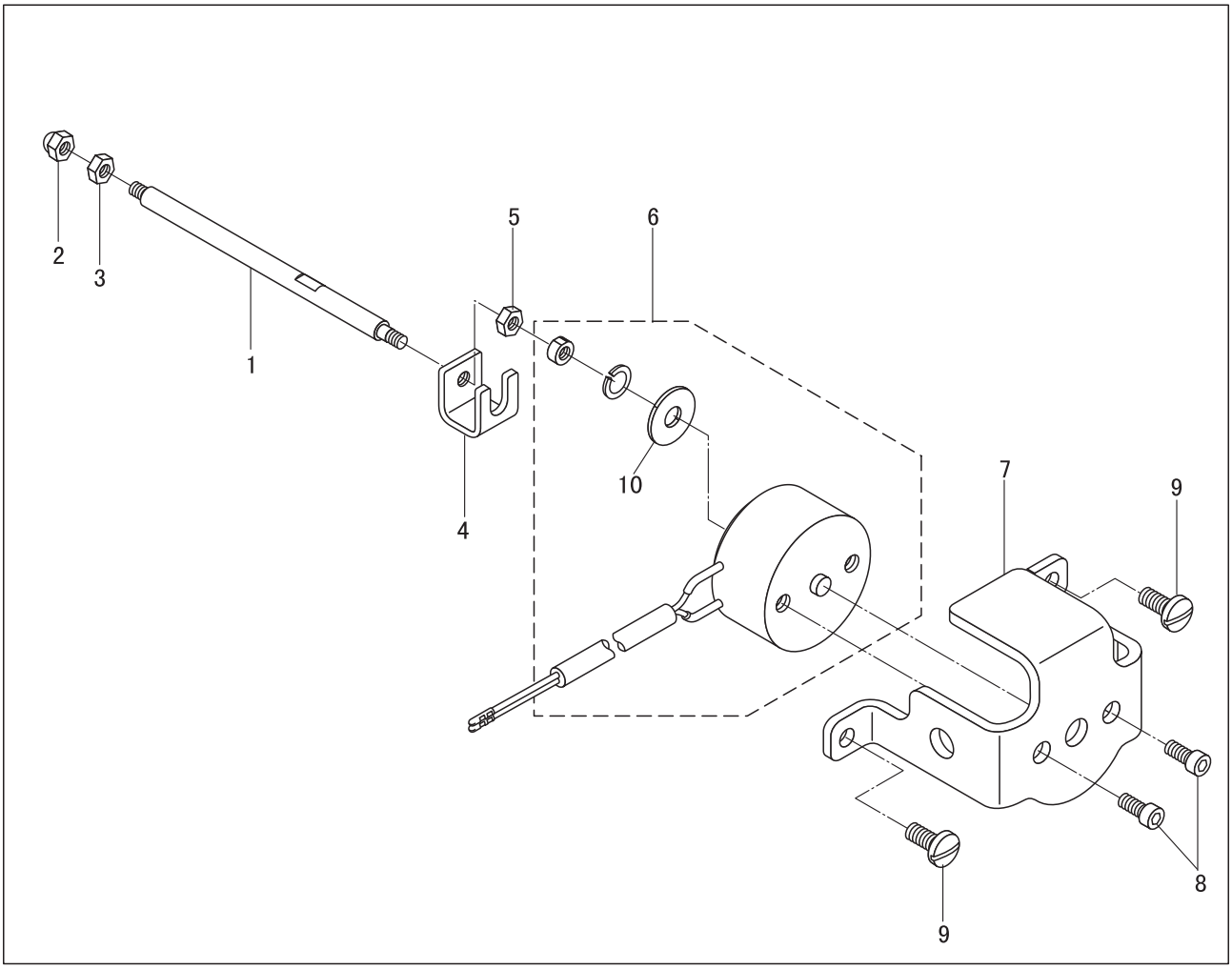

No.	Parts No.	Name of parts	Qty.	Remarks
1	119WF9–004	Tension release shaft	1	
2		Nut	1	GB923 M4
3	11KT3–021	Nut	1	
4	119WF9–003	Solenoid joint	1	
5	11KT3–021	Nut	1	
6	243WF4–001	Tension release solenoid	1	
7	119WF9–002	Solenoid installing base	1	
8		Screw	2	GB/T70.1 M4×5
9	7WF5–017	Screw	2	
10	228WF2–004	Washer	1	

13.Auto-lifer mechanism (-D1T3/-D2T3)

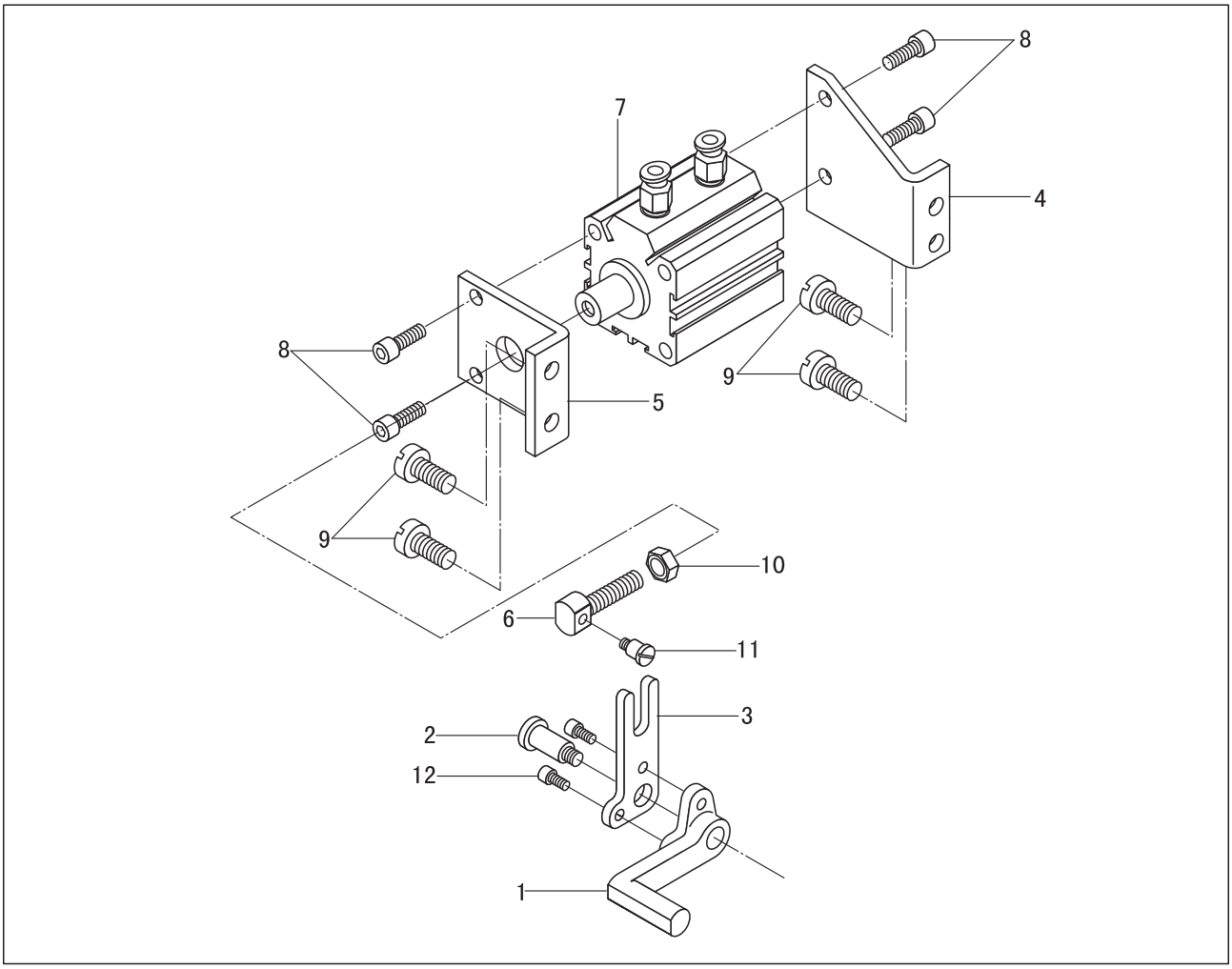

No.	Parts No.	Name of parts	Qty.	Remarks
1	228WF5–001	Crank	1	
2	228WF5–002	Screw	1	
3	228WF5–003	Driven lever	1	
4	228WF5–004	Cylinder support(1)	1	
5	228WF5–005	Cylinder support(2)	1	
6	228WF5–006	Connector	1	
7	228WF5–008	Cylinder	1	
8		Screw	4	M6×20
9	13WF2–045	Screw	4	SM15/64"×28
10		Nut	1	GB/T6170 M8
11	228WF5–007	Screw	1	
12	13WF6–010	Screw	2	M5×10
13	93WF23–002	Joint	2	APL6–01

14. Accessories

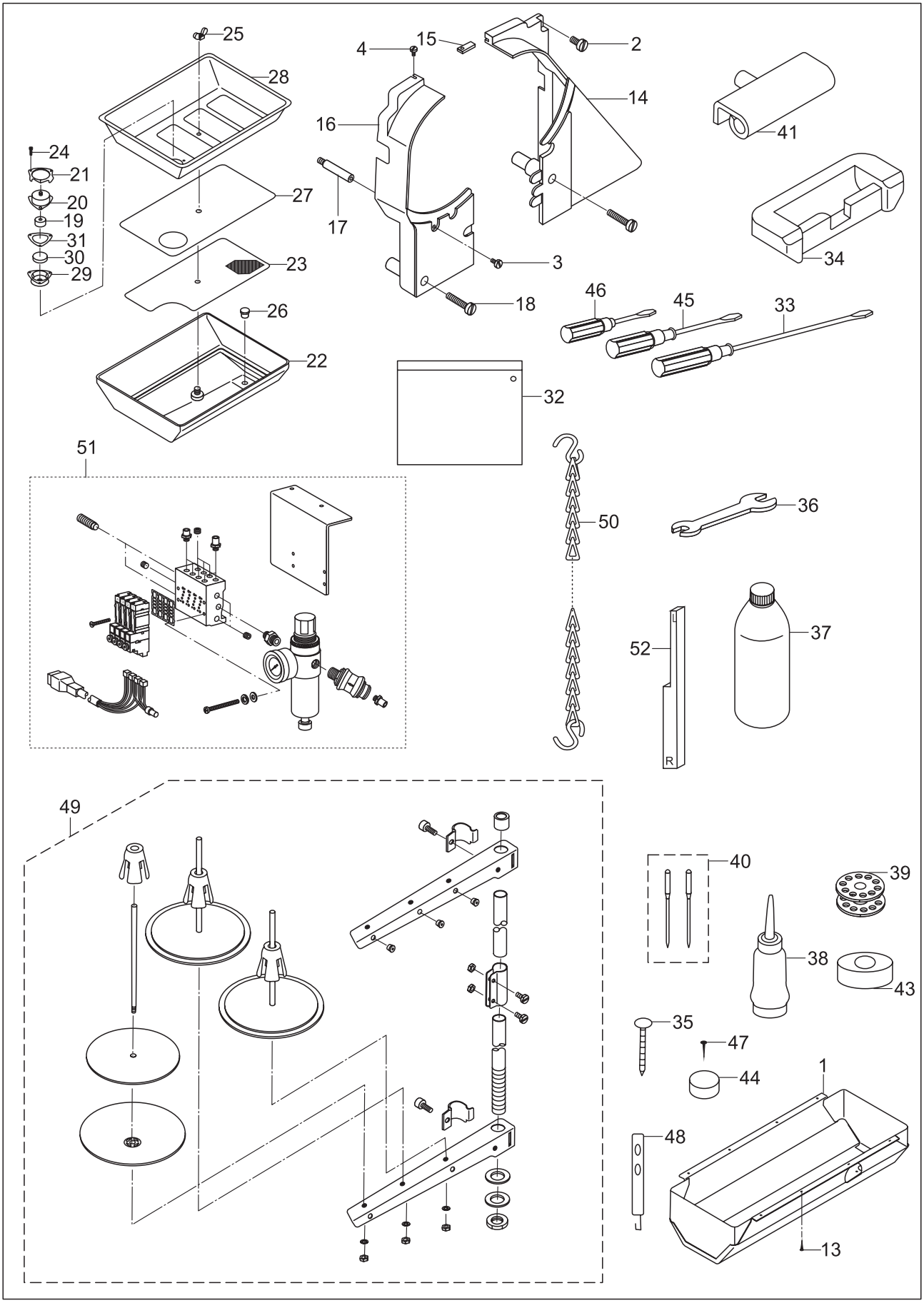

14. Accessories

No.	Parts No.	Name of parts	Qty.	Remarks
1	220WF6-001	Big oil pan	1	
2	21WF3-012	Screw	1	SM15/64" × 28
3	42WF2-008	Screw	1	SM11/64" × 40
4	2KT6-012	Screw	1	SM11/64" × 40
13		Wooden screw	8	GB99 2.5 × 16
14	92WF6-013B	Belt cover (R)	1	
15	92WF6-013C	Connector	1	
16	92WF6-013A	Belt cover (L)	1	
17	92WF6-016	Supporting pole	1	
18	1WF2-060	Screw	2	SM15/64" × 28
19	199WF7-002	Filter element	1	
20	199WF7-003	Cap	1	
21	199WF7-004	Fix piece	1	
22	199WF7-005	Small oil pan	1	
23	199WF7-006	Supporter	1	
24		Screw	3	GB/T65 M2 × 10
25		Screw	1	GB62 M5
26	199WF7-007	Plug	1	
27	199WF7-008	Filter	1	
28	199WF7-009	Tray	1	
29	199WF7-010	Case	1	
30	199WF7-011	Magnet	1	
31	199WF7-012	Seal	1	
32	33TF-010	Accessories bag	1	
33	33TF-012	Screwdriver (big)	1	
34	22T9-007F2	Hinge cushion	3	
35		Nail	8	3 / 4
36	92WF6-028	Wrench	1	
37	1F-009	Big oil pot	1	
38	33TF-011	Small oil pot	1	

14. Accessories

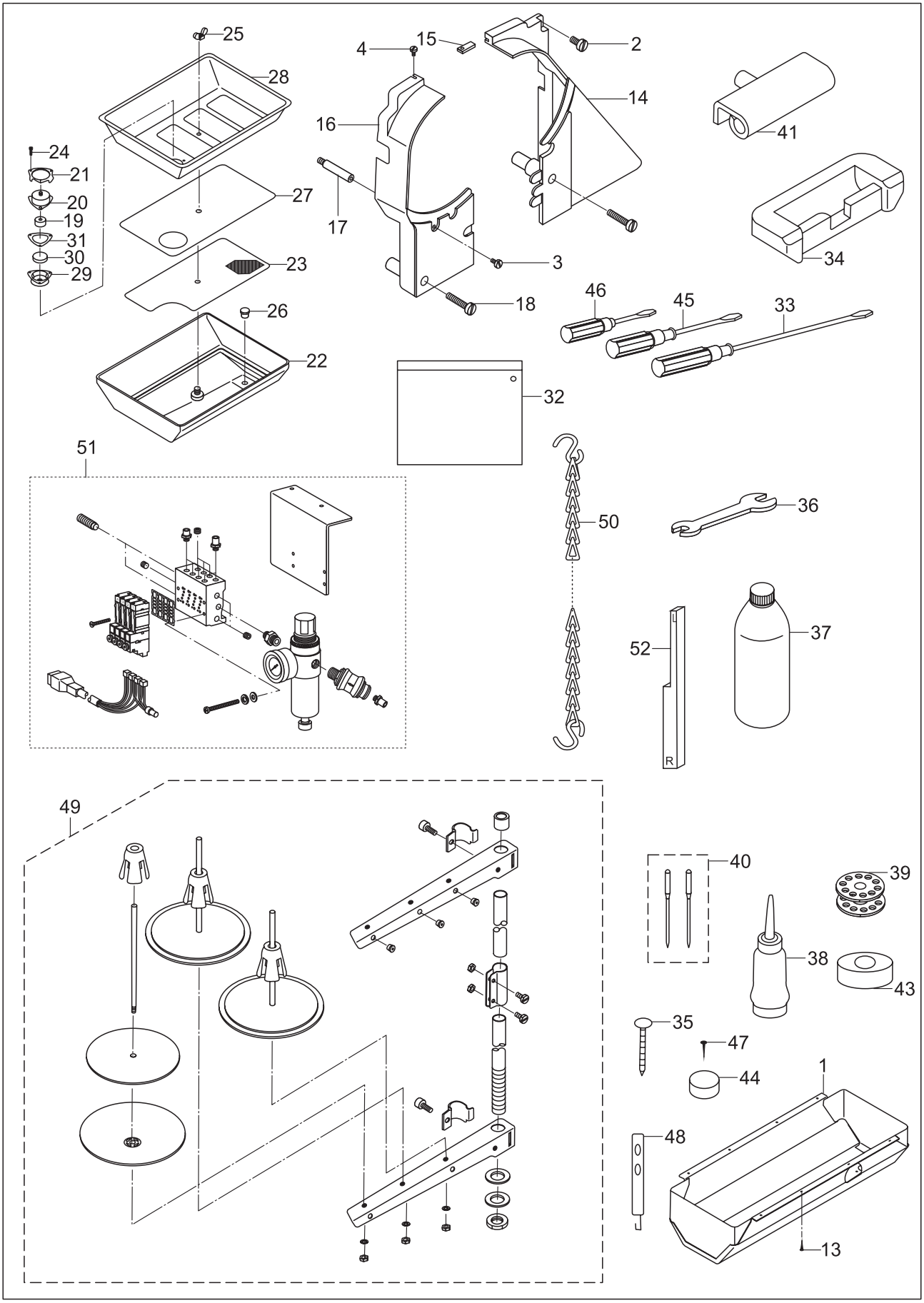

14. Accessories

No.	Parts No.	Name of parts	Qty.	Remarks
39	1WF2-065	Bobbin	3	
40		Needle	3	DP×17 24#
41	22T9-007F1	Bed hinge	2	
43	92WF6-025	Cushion	1	
44	92WF6-026	Oil felt	4	
45	33TF-013	Screwdriver (M)	1	
46	33TF-014	Screwdriver(S)	1	
47		Nail	1	SG162 Long19
48	92WF2-037	Thread finger	1	
49	1F-014	Thread stand assy.	1	
50	606082	Chain assy.	1	GC20665L25
51		Air integrator assy.	1	
52	228WF6-001	Gauge for fixed knife assembling	1	