TC-1310G | TC-2210G

INSTRUCTION BOOK // PARTS CATALOGUE

ELECTRONIC PATTERN SEWING MACHINE
ELEKTRONISCHER GROSSFELD-RIEGELAUTOMAT

TYPICAL

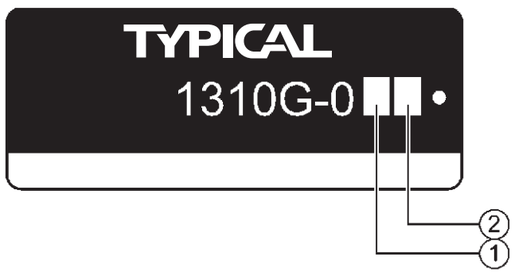

1
- 1: 厚布料 / Heavy-weight materials
- 2: 中厚布料 / Medium-weight materials

2
- S: 电磁式抬压脚 / Solenoid-type work clamp lifter
- A: 空压式抬压脚 / Pneumatic-type work clamp lifter

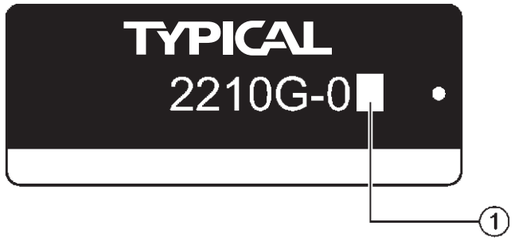

1
- 1: 厚布料 / Heavy-weight materials
- 2: 中厚布料 / Medium-weight materials

目　　录

A. 机体部分 1
B. 上轴 ·针杆装置 3
C1. 送料装置 5
C2. 送料装置 7
C3. 送料装置 11
C4. 送料装置 13
D1. 抬压装置 15
D2. 抬压装置 17
D3. 抬压装置 19
E. 下轴装置 21
F. 供油润滑装置 23
G. 穿线装置 27
H. 卷线装置 29
J. 切线装置 31
K. 扫线装置 35
L. 松线装置 37
M1. 控制箱装置 39
M2. 控制箱装置（电源基板） 41
N. 开关装置 43
P. 空压装置 45
Q. 电气部品装置 47
R. 操作盘装置 49
S. 马达装置 51
T. 踏板关系 53
U. 编程装置 55
V1. 附属装置(选购件) 57
V2. 附属装置(选购件) 59
Z. 附件 61
Wa. 警告标签 65
Sp. 不同规格零部件一览表 66
Ga. 工模具一览表 68
索引 69

CONTENTS

A. Machine body 1
B. Upper shaft and needle bar mechanism 3
C1. Feed mechanism 5
C2. Feed mechanism 7
C3. Feed mechanism 11
C4. Feed mechanism 13
D1. Work clamp lifter mechanism 15
D2. Work clamp lifter mechanism 17
D3. Work clamp lifter mechanism 19
E. Lower shaft mechanism 21
F. Lubrication 23
G. Threading mechanism 27
H. Bobbin winder mechanism 29
J. Thread trimmer mechanism 31
K. Thread wiper mechanism 35
L. Tension release mechanism 37
M1. Control box mechanism 39
M2. Control box (PCB) mechanism 41
N. Power switch mechanism 43
P. Air pressure mechanism 45
Q. Power supply equipment mechanism 47
R. Operation panel mechanism 49
S. Motor mechanism 51
T. Foot switch pedal mechanism 53
U. Programmer 55
V1. Attachment set (Option parts) 57
V2. Attachment set (Option parts) 59
Z. Accessories 61
Wa. Warning labels 65
Sp. Different parts list 66
Ga. Gauge parts list 68
Index 69

A . 机体部分 / Machine body

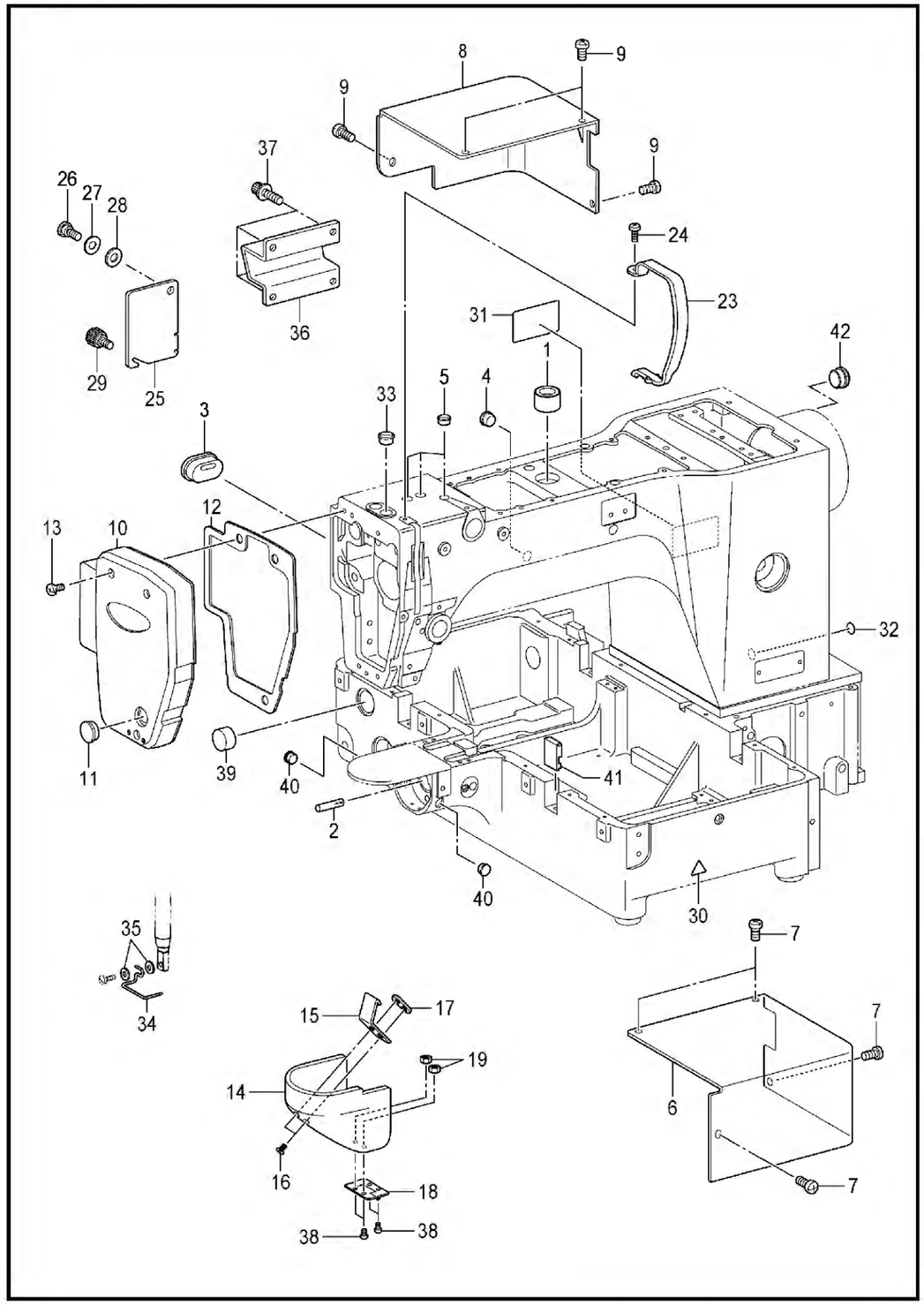

A. 机体部分 / Machine body

参照号	零部件序号	数量	零部件名称	NAME OF PARTS	RM
1	CSA4594001	1	轴套 U	BUSHING U	
2	C117608001	1	开口销	DOWEL PIN	
3	CSA4596001	1	橡皮塞 20-15	RUBBER CAP 20-15	
4	C117934001	1	橡皮塞 13.5	RUBBER CAP, 13.5	
5	C104821001	3	橡皮塞 10.5	RUBBER CAP, 10.5	
6	CSA4597001	1	马达盖 R	MOTOR COVER R	
7	C062061016	4	螺钉 M6X10	SCREW PAN M6X10	
8	CSA4598001	1	马达盖 L	MOTOR COVER L	
9	C062061016	4	螺钉 M6X10	SCREW PAN M6X10	
10	CSA4600001	1	面板	FACE PLATE	
11	C104449001	1	橡皮塞 15.5	RUBBER CAP, 15.5	
12	CSA4601001	1	面板垫片	F-PLATE PACKING	
13	C062061016	3	螺钉 M6X10	SCREW PAN M6X10	
14	CSA4603101	1	大旋梭盖	SHUTTLE RACE COVER	
15	CSA6272001	1	大旋梭盖挂钩 D	SHUTTLE RACE COVER HOOK D	
16	C004300513	2	螺钉 M3X5	SCREW, FLAT M3X5	
17	CSA3264001	1	板螺母	NUT PLATE	
18	CSA6207001	1	铰链	HINGE	
19	C021300103	2	螺母 M3	NUT, 1 M3	
23	CSA3200101	1	挑线杆防护罩	THREAD TAKE-UP COVER	
24	C062401006	1	螺钉 M4X10	SCREW PAN M4X10	
25	CSA4604001	1	间歇盖板	STEPPING COVER	
26	CSA3306001	1	段螺钉 7-3	SHOULDER SCREW,7-3	
27	C120265002	1	弹簧垫圈	SPRING WASHER	
28	CS07350002	1	垫圈	WASHER PLAIN	
29	CS36475000	1	螺钉 M5	SCREW, M5	
30	CS36924002	1	警告标记	MARK, INJURY	
			<用于日本>	<For Japan only>	
31	CSA0792001	1	操作注意标签(日/英)	LABEL, CAUTION JPN/ENG	
			<用于日本以外>	<For Except Japan>	
31	CSA0793001	1	操作注意标签(中/英)	LABEL, CAUTION CHN/ENG	
32	CS37060001	1	接地标记	LABEL, GROUNDING	
33	CS20164001	1	橡皮塞 13	RUBBER CAP, 13	
34	CS02445001	1	护指器	FINGER GUARD	
35	C025350332	2	平垫圈 L3.5	WASHER PLAIN L 3.5	
36	CSA4605001	1	机头撑杆	HEAD REST	
37	CS42446001	4	螺栓 M6X14	BOLT, SOCKET (S/P WASHER)M6X14	
38	C062300506	4	螺钉 M3X5	SCREW PAN M3X5	
39	CSA6194001	1	橡皮塞 26	RUBBER CAP 26	
40	CS44010001	2	橡皮塞 11.5	RUBBER CAP 11.5	
41	CSA6441001	2	橡皮盖	RUBBER CAP	
42	CS20164001	1	橡皮塞 13	RUBBER CAP 13	

B . 上轴 · 针杆装置 / Upper shaft and needle bar mechanism

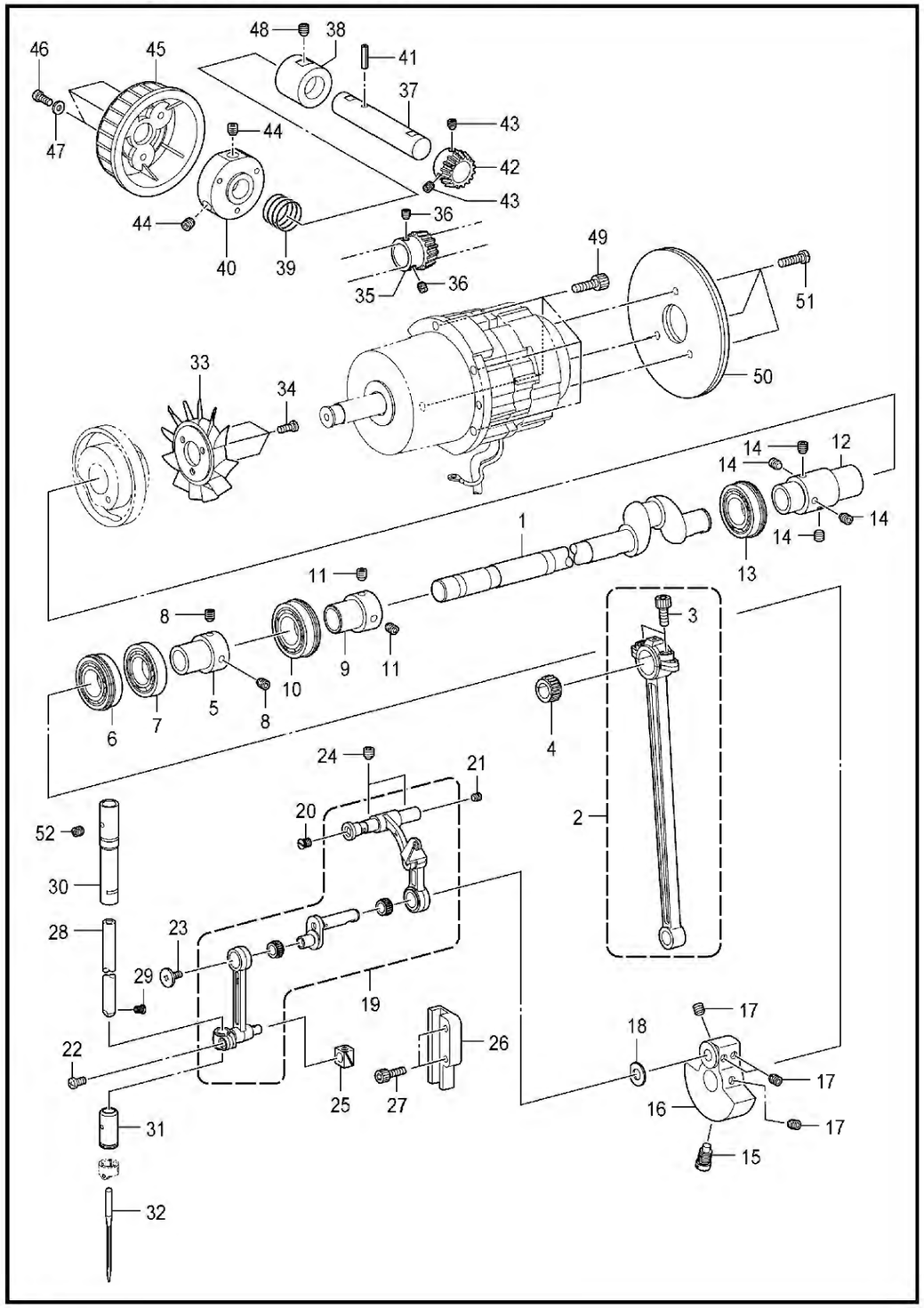

B. 上轴 · 针杆装置 / Upper shaft and needle bar mechanism

参照号	零部件序号	数量	零部件名称	NAME OF PARTS	RM
1	CSA4606001	1	上轴	UPPER SHUFT	
2	CSA3499001	1	曲柄轴组件	CRANK ROD ASSY	
3	C018501636	2	螺栓 M5X16	BOLT SOCKET M5X16	
4	CSA4172001	2	滚针轴承	NEEDLE BEARING: BLUE	
4	CSA4173001	2	滚针轴承	NEEDLE BEARING: BLACK	
4	CSA4174001	2	滚针轴承	NEEDLE BEARING: GRAY	
4	CSA4175001	2	滚针轴承	NEEDLE BEARING: YELLOW	
5	CSA3206001	1	轴承套	BALL BEARING BUSH	
6	CSA4179001	1	轴承 6904DDUNR	BALL BEARING 6904DDUNR	
7	CSA4180001	1	轴承 R-6904DDU	BALL BEARING 6904DDU	
8	CS23651001	2	固定螺钉 M6X6	SET SCREW, SOCKET (FT) M6X6	
9	CSA3206001	1	轴承套	BALL BEARING BUSH	
10	CSA4177001	1	轴承 6004DDUNR	BALL BEARING 6004DDUNR	
11	CS23651001	2	固定螺钉 M6X6	SET SCREW, SOCKET (FT) M6X6	
12	CSA4608101	1	管接头 G	JOINT G	
13	CSA4178001	1	轴承 6204DDUNR	BALL BEARING 6204DDUNR	
14	CS23651001	4	固定螺钉 M6X6	SET SCREW, SOCKET (FT) M6X6	
15	CS25235001	1	螺钉 M8	SCREW, M8	
16	CSA4609101	1	曲柄 G	THREAD TAKE-UP CRANK G	
17	CS23651001	4	固定螺钉 M6X6	SET SCREW, SOCKET (FT) M6X6	
18	C110367001	1	垫圈 8	WASHER, PLAIN SPECIAL 8	
19	CSA6182001	1	针杆连杆组件 FK	THREAD TAKE-UP LEVER FK SET	
20	CSA2958001	1	螺钉 M5X6	SCREW FLAT M5X6	
21	C012500536	1	螺钉 M5X5	SET SCREW SOCKET (FT) M5X5	
22	C062400816	1	螺钉 M4X8	SCREW PAN M4X8	
23	C145465001	1	螺钉 SM3.57-40X6L	SCREW, SM3.57-40X6 L	
24	C012060636	2	螺钉 M6X6	SET SCREW SOCKET (FT) M6X6	
25	C142211001	1	滑块	SLIDE BLOCK	
26	CSA3528001	1	滑块导向 B	SLIDE BLOCK GUIDE	
27	C018401636	2	螺栓 M4X16	BOLT SOCKET M4X16	
28	CSA4622001	1	针杆	NEEDLE BAR	
29	C144458001	1	螺钉 SM3.57-40X4.5	SET SCREW, SM3.57-40X4.5	
30	CSA4666001	1	针杆轴套 UK	NEEDLE BAR BUSH UK	
31	CSA3224001	1	针棒轴套 D	NEEDLE BAR BUSH,D	
32	C* P. 67	1	机针	NEEDLE	
33	CS38713100	1	叶轮	FAN	
34	C062400816	3	螺钉 M4X8	SCREW PAN M4X8	
35	CSA6108001	1	齿轮 R	PULLEY GEAR R	
36	C012500536	2	螺钉 M5X5	SET SCREW SOCKET (FT) M5X5	
37	CSA4626001	1	上轮轴	PULLEY SHUFT	
38	CSA4627001	1	上轮轴套	PULLEY BUSH	
39	CSA4628001	1	上轮弹簧	PULLEY SPRING	
40	CSA4629001	1	上轮基座	PULLEY BASE	
41	C047401242	1	弹簧销 4X12	PIN SPRING ROLL AW4	
42	CSA4624001	1	齿轮	PULLEY GEAR L	
43	C012500536	2	螺钉 M5X5	SET SCREW SOCKET (FT) M5X5	
44	CS23651001	2	固定螺钉 M6X6	SET SCREW, SOCKET (FT) M6X6	
45	CSA4630001	1	上轮	PULLEY	
46	C062401006	3	螺钉 M4X10	SCREW PAN M4X10	
47	CSA5158001	3	垫圈 L4	WASHER PLAIN L 4	
48	C012060636	1	螺钉 M6X6	SET SCREW SOCKET (FT) M6X6	
49	C018501636	4	螺栓 M5X16	BOLT SOCKET M5X16	
50	CSA5230001	2	惯性轮 2	FRIES WHEEL 2	
51	C062401016	3	螺钉 M4X10	SCREW PAN M4X10	
52	C012060536	1	螺钉 M6X5	SET SCREW SOCKET (FT) M6X5	

C1 . 送料装置 / Feed mechanism

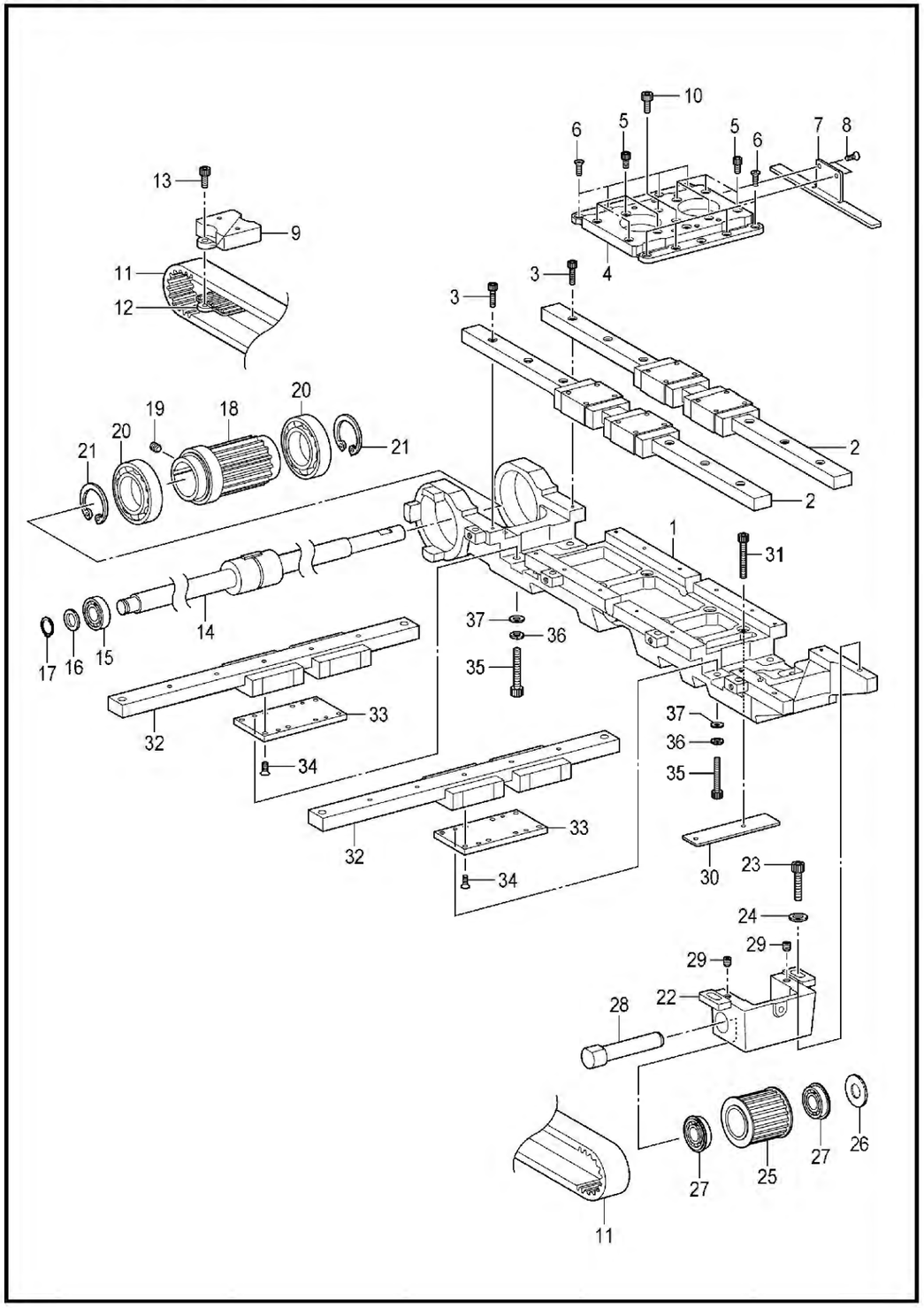

C1. 送料装置 / Feed mechanism

参照号	零部件序号	数量	零部件名称	NAME OF PARTS	RM
1	CSA5229101	1	送布基座组件	FEED BRACKET ASSY	
2	CSA4637001	2	X-LM导向	X-LM GUIDE	
3	C018301436	15	螺栓 M3X14	BOLT SOCKET M3X14	
4	CSA4635101	1	送布台 (X)	FEED BRACKET X	
5	C018300636	8	螺栓 M3X6	BOLT SOCKET M3X6	
6	C061300616	8	螺钉 M3X6	SCREW FLAT M3X6	
7	CSA4636101	1	传感器板 (X)	X-SENSOR PLATE	
8	C061300616	2	螺钉 M3X6	SCREW FLAT M3X6	
9	CSA4641001	1	皮带支架 (X)	X-BELT HOLDER	
10	C018400836	2	螺栓 M4X8	BOLT SOCKET M4X8	
11	CSA4649001	1	X-GT皮带	X-GT BELT	
12	CSA4640001	1	皮带支架板 (X)	X-BELT HOLDER PLATE	
13	C018400836	2	螺栓 M4X8	BOLT SOCKET M4X8	
14	CSA4639001	1	花键轴 (Y)	Y-BALL SPLINE	
15	C076000600	1	球轴承 6000VV	BALL BEARING RADIAL 6000VV	
16	C025100132	1	平垫圈 S10	WASHER PLAIN S 10	
17	C048100142	1	轴用挡圈 C10	RETAINING RING EXTERNAL C10	
18	CSA4638001	1	X-左轮	X-LEFT PULLEY	
19	C012060636	1	螺钉 M6X6	SET SCREW SOCKET (FT) M6X6	
20	C076806606	2	球轴承 6806VV	BALL BEARING 6806VV	
21	C048420242	2	孔用挡圈 C42	RETAINING RING INTERNAL C42	
22	CSA4642001	1	X-轮基座	X-PULLEY BRACKET	
23	C018501636	2	螺栓 M5X16	BOLT SOCKET M5X16	
24	C025050236	2	平垫圈 M5	WASHER PLAIN M 5	
25	CSA4643001	1	X-右轮组件	X-RIGHT PULLEY ASSY	
26	CS20356001	1	平垫圈 10	WASHER, PLAIN 10	
27	CSA4647001	2	球轴承 6900ZZNR	BALL BEARING 6900ZZNR	
28	CSA4648001	1	X-轮支点轴	X-PULLEY FULCRUM SHAFT	
29	C012060636	2	螺钉 M6X6	SET SCREW SOCKET (FT) M6X6	
30	CSA4650001	1	Y-传感板	Y-SENSOR PLATE	
31	C018402036	2	螺栓 M4X20	BOLT SOCKET M4X20	
32	CSA4651101	2	Y-LM导向	Y-LM GUIDE	
33	CSA4652101	2	Y-LM垫片	Y-LM SPACER	
34	C061300616	16	螺钉 M3X6	SCREW FLAT M3X6	
35	C018402036	8	螺栓 M4X20	BOLT SOCKET M4X20	
36	C025040236	8	平垫圈 M4	WASHER PLAIN M 4	
37	C028040246	8	弹簧垫圈 2-4	WASHER SPRING 2-4	

C2 . 送料装置 / Feed mechanism

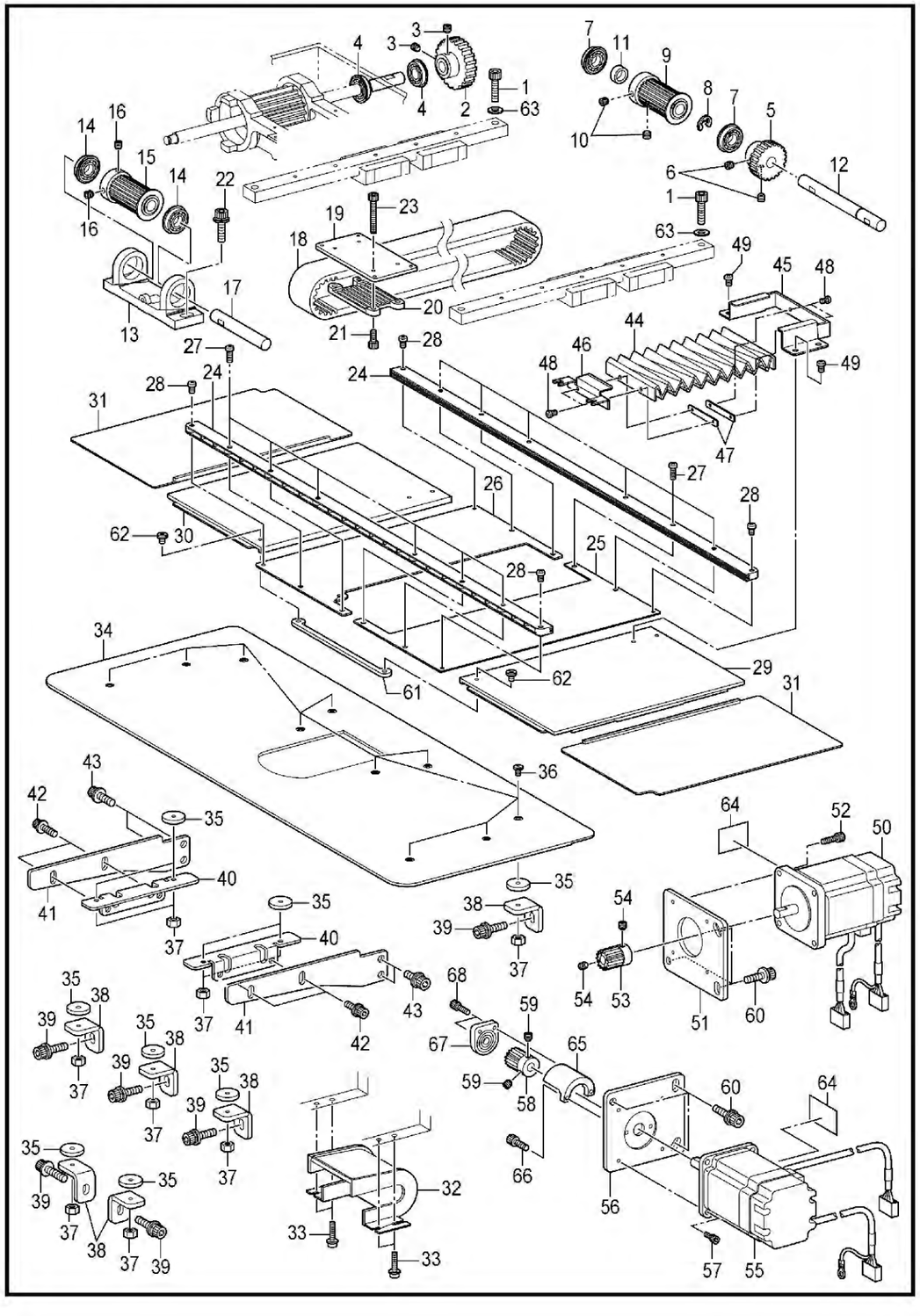

C2. 送料装置 / Feed mechanism

参照号	零部件序号	数量	零部件名称	NAME OF PARTS	RM
1	C018062036	4	螺栓 M6X20	BOLT SOCKET M6X20	
2	CSA4653001	1	X-送布齿轮	X-FEED GEAR	
3	C012060636	2	螺钉 M6X6	SET SCREW SOCKET (FT) M6X6	
4	CSA4647001	2	球轴承 6900ZZNR	BALL BEARING 6900ZZNR	
5	CSA4654001	1	Y-送布齿轮	Y-FEED GEAR	
6	C012060636	2	螺钉 M6X6	SET SCREW SOCKET (FT) M6X6	
7	CSA4647001	2	球轴承 6900ZZNR	BALL BEARING 6900ZZNR	
8	C048080342	1	挡圈 E8	RETAINING RING E8	
9	CSA4655101	1	Y-轮组件	Y-PULLEY ASSY	
10	C012060636	2	螺钉 M6X6	SET SCREW SOCKET (FT) M6X6	
11	CSA4658001	1	Y-轮轴套	Y-PULLEY COLLAR	
12	CSA4659001	1	Y-驱动轴	Y-PULLEY DRIVING SHAFT	
13	CSA4661001	1	Y-轮基座	Y-PULLEY BRACKET	
14	CSA4647001	2	球轴承 6900ZZNR	BALL BEARING 6900ZZNR	
15	CSA4655101	1	Y-轮组件	Y-PULLEY ASSY	
16	C012060636	2	螺钉 M6X6	SET SCREW SOCKET (FT) M6X6	
17	CSA4662001	1	Y-轮支点轴	Y-PULLEY FULCRUM SHAFT	
18	CSA4663001	1	Y-GT皮带	Y-GT BELT	
19	CSA4664001	1	Y-皮带支架板	BELT SUPPORT PLATE Y	
20	CSA4665001	1	Y-皮带支撑板	Y-BELT WORK CLAMP PLATE	
21	C018400836	4	螺栓 M4X8	BOLT SOCKET M4X8	
22	CSA2972001	2	螺栓 M6X18	BOLT, SOCKET (S/P WASHER)M6X18	
23	C018402036	4	螺栓 M4X20	BOLT SOCKET M4X20	
24	CSA4667101	2	盖轨道	COVER RAIL	
25	CSA4671001	1	固定盖（R）	FIXATION R	
26	CSA4672001	1	固定盖（L）	FIXATION L	
27	C062401016	12	螺钉 M4X10	SCREW PAN M4X10	
28	C062400416	4	螺钉 M4X4	SCREW, PAN M4X4	
29	CSA6359001	1	内盖组件 R	INSIDE COVER R ASSY	
30	CSA6360001	1	内盖组件 L	INSIDE COVER L ASSY	
31	CSA6361001	2	外盖组件	OUTSDE COVER ASSY	
32	CSA4673001	1	Y-皮带轮盖	BELT COVER Y	
33	C0A5401006	4	螺栓(带垫圈) M4X10DB	SCREW PAN (S/P WASHER) M4X10	
34	CSA4675201	1	补助板	AUXILIARY PLATE	
35	CSA4677101	10	补助板缓冲	AUXILIARY PLATE CUSHION	
36	CS23849001	10	螺钉 M4X13.3	SCREW,M4X13.3	
37	C021400216	10	六角螺母 M4	NUT 2 M4	
38	CSA4676001	6	补助板支架	AUXILIARY PLATE BRACKET	
39	CS42446001	6	螺栓 M6X14	BOLT, SOCKET (S/P WASHER)M6X14	
40	CSA6434001	2	补助板支架 U	SUPPORT PLATE GUIDE U	
41	CSA6435001	2	补助板支架 D	SUPPORT PLATE GUIDE D	
42	CS55484002	4	螺拴(带垫圈) M5X10	BOLT, SOCKET (S/P WASHER)M5X10	
43	CS42446001	4	螺栓 M6X14	BOLT, SOCKET (S/P WASHER)M6X14	
44	CSA4679101	1	蛇纹管	BELLOW	
45	CSA4680101	1	蛇纹管支架 R	BELLOW PRESSER R	
46	CSA4681001	1	蛇纹管支架 F	BELLOW PRESSER F	
47	CSA4682001	2	螺母	BELLOW NUT	
48	C062300416	4	螺钉 M3X4	SCREW PAN M3X4	
49	C062400416	4	螺钉 M4X4	SCREW, PAN M4X4	
50	CSA4820201	1	脉冲马达组件 X	PULSE MOTOR ASSY X	
51	CSA4684001	1	马达安装板	MOTOR BRACKET PLATE	
52	C018401036	4	螺栓 M4X10	BOLT SOCKET M4X10	
53	CSA3707001	1	驱动齿轮 16	GEAR 16	
54	C012060536	2	螺钉 M6X5	SET SCREW SOCKET (FT) M6X5	
55	CSA4823101	1	脉冲马达组件 Y	PULSE MOTOR ASSY Y	
56	CSA4684001	1	马达安装板	MOTOR BRACKET PLATE	
57	C018401036	4	螺栓 M4X10	BOLT SOCKET M4X10	
58	CSA3707001	1	驱动齿轮 16	GEAR 16	
59	C012060536	2	螺钉 M6X5	SET SCREW SOCKET (FT) M6X5	
60	CS42446001	6	螺栓 M6X14	BOLT, SOCKET (S/P WASHER)M6X14	
61	CSA6306001	1	盖连接板	COVER CONNECT PLATE	

C2 . 送料装置 / Feed mechanism

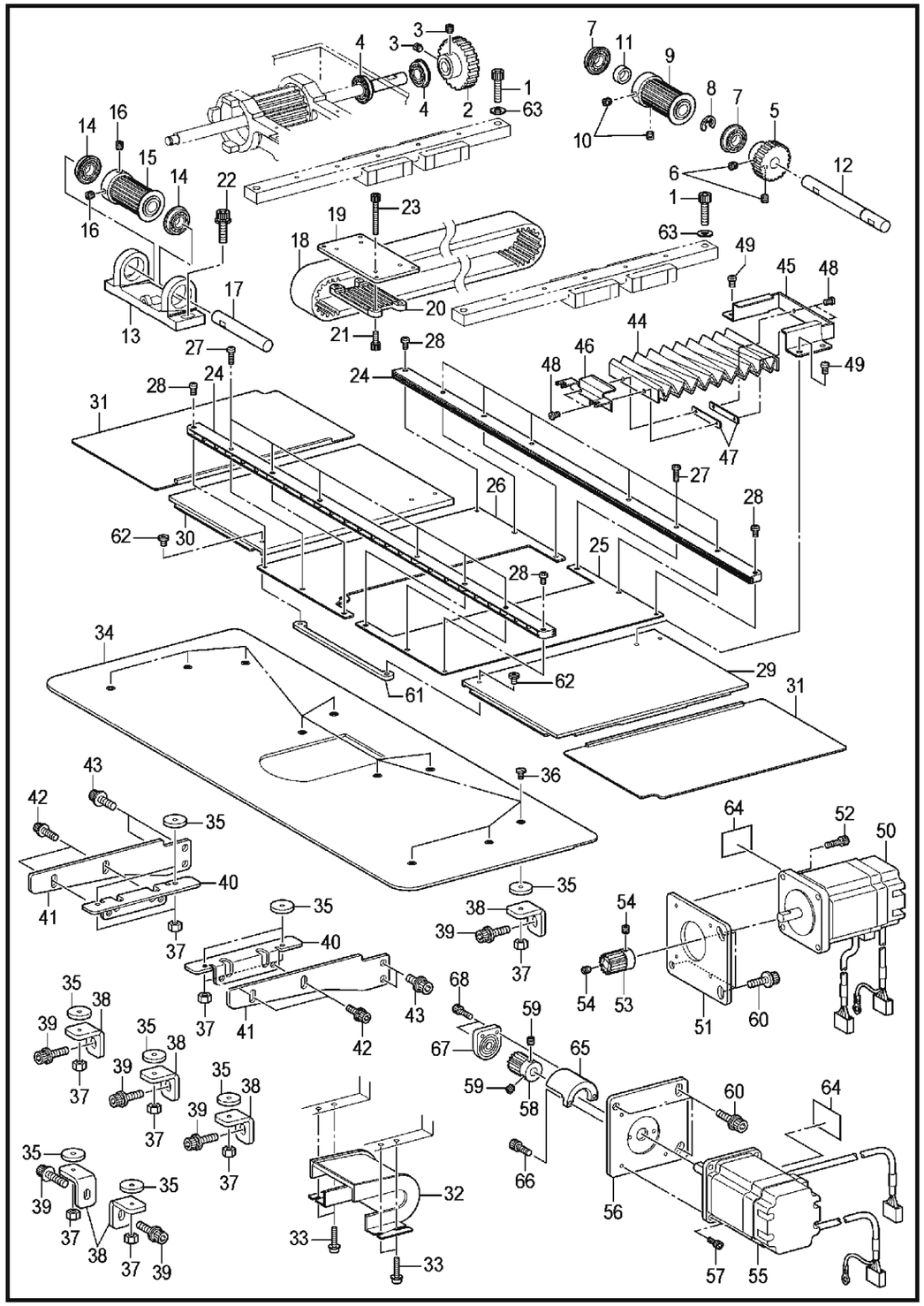

C2. 送料装置 / Feed mechanism

参照号	零部件序号	数量	零部件名称	NAME OF PARTS	RM
62	CS23418001	2	螺钉 M4X5	SCREW, M4X5	
63	C118735001	4	垫圈	WASHER	
64	CSA4224001	2	注意符号 30X40	MARK, ATTENTION 30X40	
65	CSA6450101	1	轴承支架座	BEARING HOLDER BASE	
66	C018501036	2	螺栓 M5X10	BOLT SOCKET M5X10	
67	CSA6451101	1	轴承支架组件	BEARING HOLDER ASSY	
68	C018401036	2	螺栓 M4X10	BOLT SOCKET M4X10	

< 电磁式 / For Solenoid type >

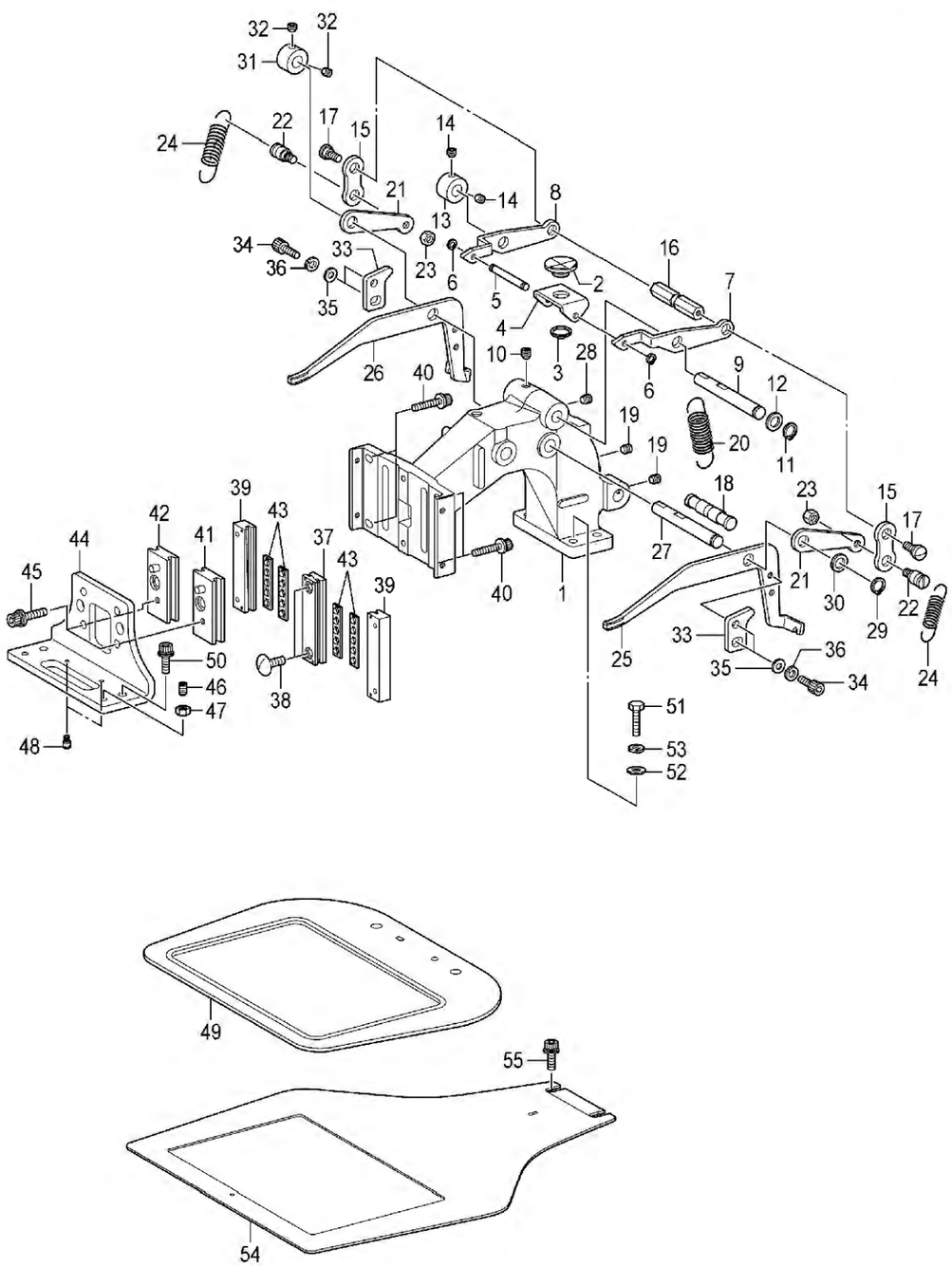

参照号	零部件序号	数量	零部件名称	NAME OF PARTS	RM
			＜电磁式＞	**<For Solenoid type>**	
1	CSA4686101	1	压脚臂	WORK CLAMP	
2	CSA4687101	1	滑块	SLIDER	
3	C048100142	1	轴用挡圈 **C10**	RETAINING RING EXTERNAL C10	
4	CSA4688001	1	滑块支架	SUPPORT SLIDER	
5	CSA4689001	1	滑块支架轴	SUPPORT SHAFT SLIDER	
6	C048040142	2	轴用挡圈 **C4**	RETAINING RING EXTERNAL C4	
7	CSA4690001	1	压脚柄 **R**	WORK CLAMP LIFTER LEVER R	
8	CSA4691001	1	压脚柄 **L**	WORK CLAMP LIFTER LEVER L	
9	CSA4692001	1	压脚臂杆轴	WORK CLAMP LIFTER SHAFT	
10	C012060636	1	螺钉 **M6X6**	SET SCREW SOCKET (FT) M6X6	
11	C048080142	1	轴用挡圈 **C8**	RETAINING RING EXTERNAL C8	
12	C110367001	1	垫圈 **8**	WASHER, PLAIN SPECIAL 8	
13	CSA3231001	1	紧圈 **B**	SET SCREW COLLAR,B	
14	C012060536	2	螺钉 **M6X5**	SET SCREW, SOCKET (FT) M6X5	
15	CSA4696001	2	连杆	CONNECTING ROD	
16	CSA4693001	1	弹簧挂钩轴 **A**	SPRING HOLDER SHAFT A	
17	CSA4697001	2	段螺钉 **M5**	SHOULDER SCREW M5	
18	CSA4694001	1	弹簧挂钩轴 **B**	SPRING HOLDER SHAFT B	
19	C012060636	2	螺钉 **M6X6**	SET SCREW SOCKET (FT) M6X6	
20	CSA4695001	1	弹簧	SPRIHG LIFT	
21	CSA4698001	2	连接板	CONNECTING LINK	
22	CSA4700001	2	弹簧挂钩	WORK CLAMP SPRING HOLDER	
23	C021500216	2	六角螺母 **M5**	NUT 2 M5	
24	CSA4701001	2	弹簧	WORK CLAMP SPRING	
25	CSA4702001	1	压脚臂杆 **R**	WORK CLAMP LIFTER LEVER R	
26	CSA4703001	1	压脚臂杆 **L**	WORK CLAMP LIFTER LEVER L	
27	CSA4692001	1	压脚臂杆轴	WORK CLAMP LIFTER SHAFT	
28	C012060636	1	螺钉 **M6X6**	SET SCREW SOCKET (FT) M6X6	
29	C048080142	1	轴用挡圈 **C8**	RETAINING RING EXTERNAL C8	
30	C110367001	1	垫圈 **8**	WASHER, PLAIN SPECIAL 8	
31	CSA3231001	1	紧圈 **B**	SET SCREW COLLAR,B	
32	C012060536	2	螺钉 **M6X5**	SET SCREW, SOCKET (FT) M6X5	
33	CSA4699001	2	定位	STOPPER	
34	C018500836	4	螺栓 **M5X8**	BOLT SOCKET M5X8	
35	C025050236	4	平垫圈 **M5**	WASHER PLAIN M 5	
36	C028050246	4	弹簧垫圈 **2-5**	WASHER SPRING 2-5	
37	CSA4863001	1	压脚导向组件 **A**	WORK CLAMP GUIDE A ASSY	
38	CS23849001	2	螺钉 **M4X16**	SCREW, M4X16	
39	CSA4864001	2	压脚导向组件 **B**	WORK CLAMP GUIDE B ASSY	
40	CS55482001	4	螺拴(带垫圈) **M4X14**	BOLT, SOCKET (S/P WASHER)M4X14	
41	CSA4712001	1	压脚滑块组件 **R**	WORK CLAMP SLIDER ASSY R	
42	CSA4714001	1	压脚滑块组件 **L**	WORK CLAMP SLIDER ASSY L	
43	CSA4706101	4	压脚挡板组件	WORK CLAMP RETAINER ASSY	
44	CSA4708001	1	压脚	WORK CLAMP	
45	CS55485001	2	螺拴(带垫圈) **M5X12**	BOLT, SOCKET (S/P WASHER)M5X12	
46	C012501031	2	螺钉 **M5X10**	SET SCREW SOCKET (FT) M5X10	
47	C021500216	2	六角螺母 **M5**	NUT 2 M5	
48	CSA4709001	2	定位段螺钉	SHOULDER SCREW	
49	CSA4866101	1	压板组件 **311**	WORK CLAMP 311 ASSY	
50	CS55484002	2	螺拴(带垫圈) **M5X10**	BOLT, SOCKET (S/P WASHER)M5X10	
51	C017501616	4	螺栓 **M5X16**	BOLT M5X16	
52	C025050236	4	平垫圈 **M5**	WASHER PLAIN M 5	
53	C028050246	4	弹簧垫圈 **2-5**	WASHER SPRING 2-5	
54	CSA4715001	1	送料板 **1310G**	•••••••••••••••••	
55	CS55484002	2	螺拴(带垫圈) **M5X10**	BOLT, SOCKET (S/P WASHER)M5X10	

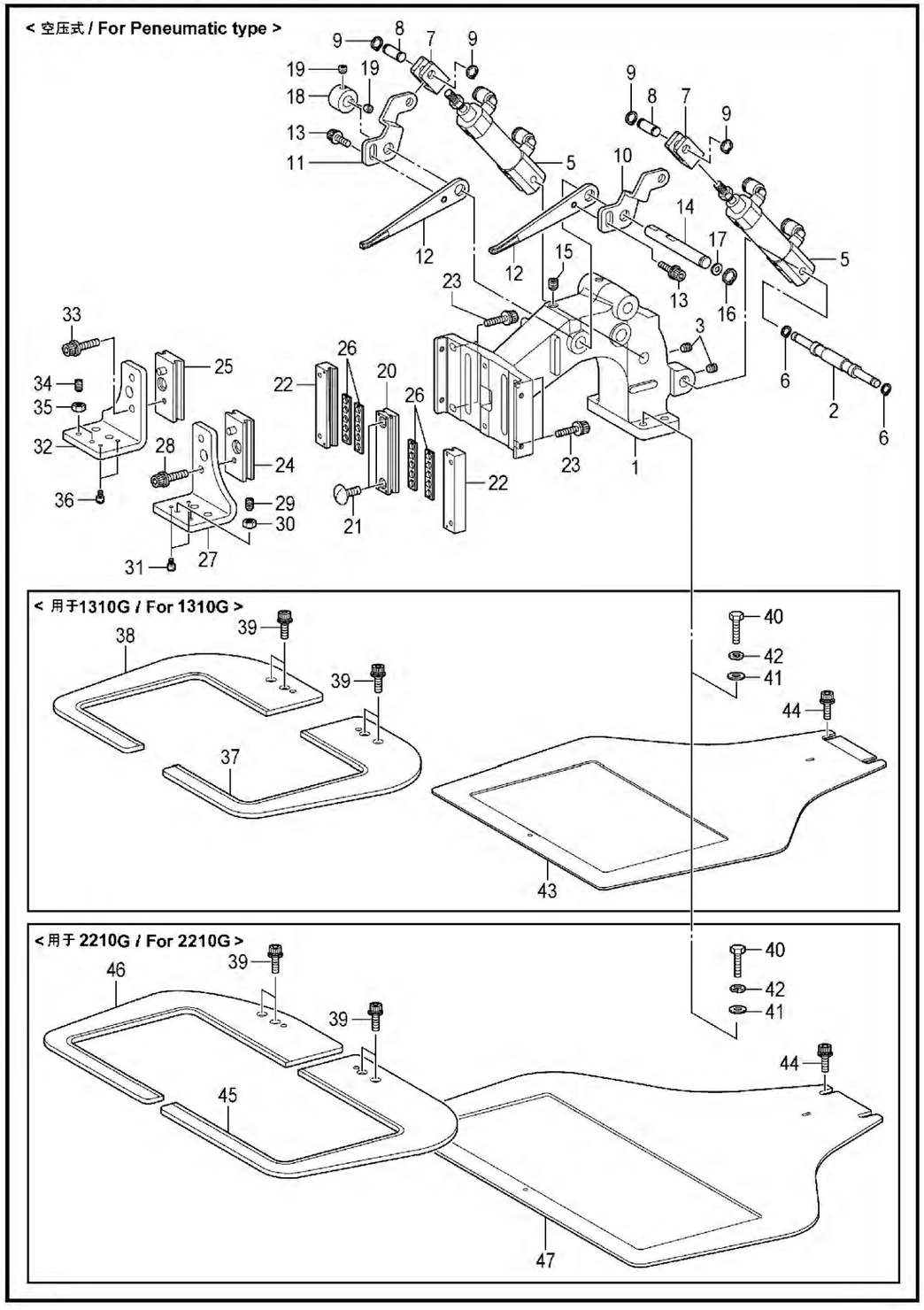

参照号	零部件序号	数量	零部件名称	NAME OF PARTS	RM
			＜空压式＞	**<For Peneumatic type>**	
1	CSA4686101	1	压脚臂	WORK CLAMP	
2	CSA4717001	1	气缸轴	CYLINDER SHAFT	
3	C012060636	2	螺钉 M6X6	SET SCREW SOCKET (FT) M6X6	
5	CSA4719001	2	气缸组件 R	AIR CYLINDER ASSY	
6	C048050142	2	轴用挡圈 C5	RETAINING RING EXTERNAL C5	
7	CSA4720001	2	气缸接头	CYLINDER JOINT	
8	CSA4721001	2	气缸接头轴	CYLINDER JOINT SHAFT	
9	C048060142	4	轴用挡圈 C6	RETAINING RING EXTERNAL C6	
10	CSA4722001	1	压脚柄 R(气压)	WORK CLAMP LIFTER LEVER R AIR	
11	CSA4723001	1	压脚柄 L(气压)	WORK CLAMP LIFTER LEVER L AIR	
12	CSA4724001	2	压脚臂杆(气压)	WORK CLAMP LIFTER SHAFT AIR	
13	CS55479001	2	螺栓(带垫圈) M4X8	BOLT, SOCKET (S/P WASHER) M4X8	
14	CSA4692001	1	压脚臂杆轴	WORK CLAMP LIFTER SHAFT	
15	C012060636	1	螺钉 M6X6	SET SCREW SOCKET (FT) M6X6	
16	C048080142	1	轴用挡圈 C8	RETAINING RING EXTERNAL C8	
17	C110367001	1	垫圈 8	WASHER, PLAIN SPECIAL 8	
18	CSA3231001	1	紧圈 B	SET SCREW COLLAR,B	
19	C012060536	2	螺钉 M6X5	SET SCREW, SOCKET (FT) M6X5	
20	CSA4863001	1	压脚导向组件 A	WORK CLAMP GUIDE A ASSY	
21	CS23849001	2	螺钉 M4X16	SCREW, M4X16	
22	CSA4864001	2	压脚导向组件 B	WORK CLAMP GUIDE B ASSY	
23	CS55482001	4	螺栓(带垫圈) M4X14	BOLT, SOCKET (S/P WASHER)M4X14	
24	CSA4712001	1	压脚滑块组件 R	WORK CLAMP SLIDER ASSY R	
25	CSA4714001	1	压脚滑块组件 L	WORK CLAMP SLIDER ASSY L	
26	CSA4706101	4	压脚挡板组件	WORK CLAMP RETAINER ASSY	
27	CSA4725001	1	压脚 R	WORK CLAMP R	
28	CS55485001	1	螺栓(带垫圈)M5X12	BOLT, SOCKET (S/P WASHER)M5X12	
29	C012501031	2	螺钉 M5X10	SET SCREW SOCKET (FT) M5X10	
30	C021500216	2	六角螺母 M5	NUT 2 M5	
31	CSA4709001	2	定位段螺钉	SHOULDER SCREW	
32	CSA4726001	1	压脚 L	WORK CLAMP L	
33	CS55485001	1	螺栓(带垫圈) M5X12	BOLT, SOCKET (S/P WASHER)M5X12	
34	C012501031	2	螺钉 M5X10	SET SCREW SOCKET (FT) M5X10	
35	C021500216	2	六角螺母 M5	NUT 2 M5	
36	CSA4709001	2	定位段螺钉	SHOULDER SCREW	
			＜用于 1310G＞	**< For1310G >**	
37	CSA4868101	1	压板组件 1310R	·····	
38	CSA4869101	1	压板组件 1310L	·····	
39	CS55484002	4	螺栓(带垫圈) M5X10	BOLT, SOCKET (S/P WASHER)M5X10	
40	C017501616	4	螺栓 M5X16	BOLT M5X16	
41	C025050236	4	平垫圈 M5	WASHER PLAIN M 5	
42	C028050246	4	弹簧垫圈 2-5	WASHER SPRING 2-5	
43	CSA4715001	1	送料板 1310G	·····	
44	CS55484002	2	螺栓(带垫圈) M5X10	BOLT, SOCKET (S/P WASHER)M5X10	
			＜用于 2210G＞	**< For 2210G>**	
45	CSA4870101	1	压脚板组件 2210R	·····	
46	CSA4871101	1	压脚板组件 2210L	·····	
39	CS55484002	4	螺栓(带垫圈) M5X10	BOLT, SOCKET (S/P WASHER)M5X10	
40	C017501616	4	螺栓 M5X16	BOLT M5X16	
41	C025050236	4	平垫圈 M5	WASHER PLAIN M 5	
42	C028050246	4	弹簧垫圈 2-5	WASHER SPRING 2-5	
44	CS55484002	2	螺栓(带垫圈) M5X10	BOLT, SOCKET (S/P WASHER)M5X10	
47	CSA4852001	1	送料板 2210G	·····	

D1 . 抬压装置 / Work clamp lifter mechanism

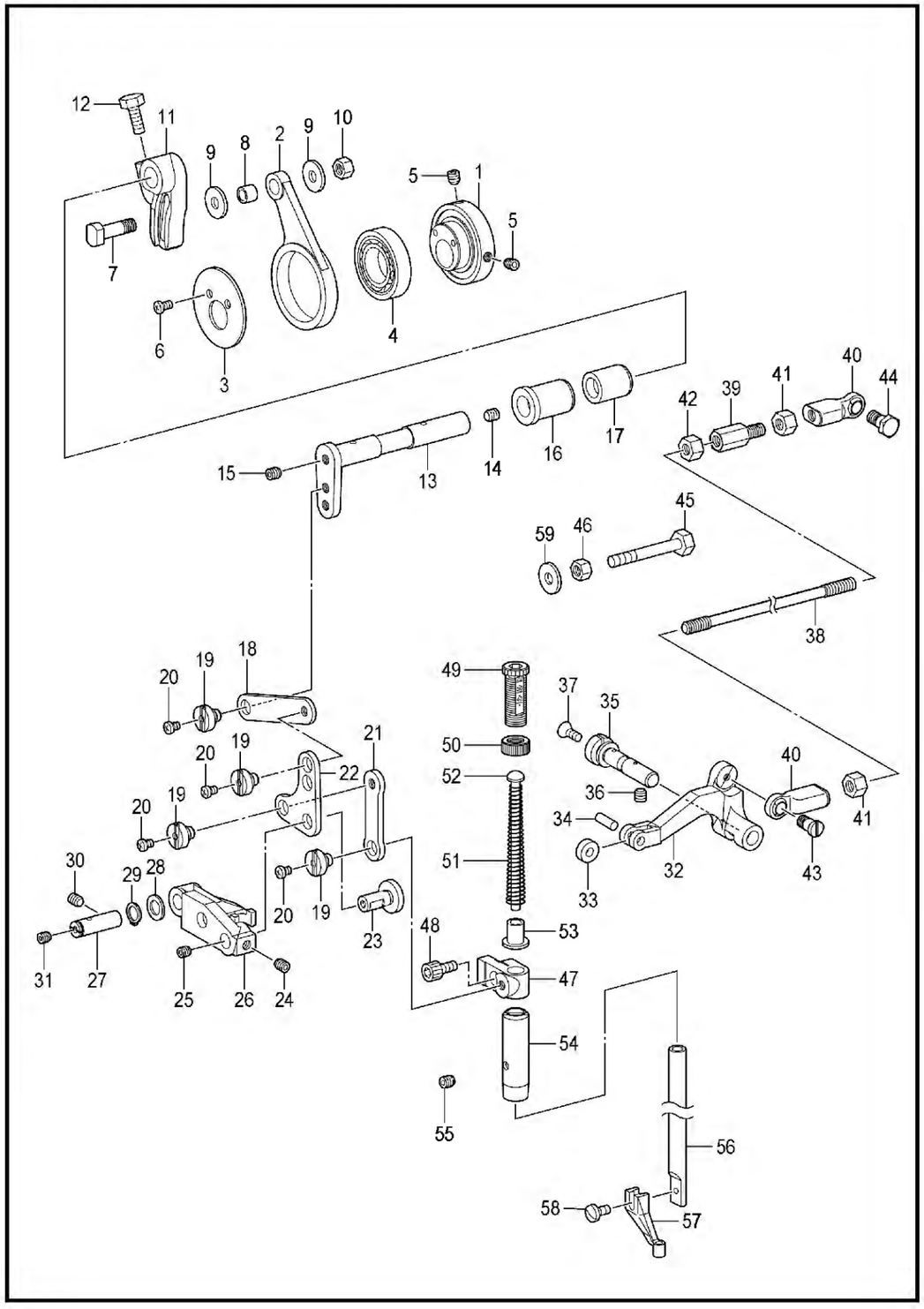

D1. 抬压装置 / Work clamp lifter mechanism

参照号	零部件序号	数量	零部件名称	NAME OF PARTS	RM
1	CSA4759001	1	凸轮	STEPPING CLAMP CAM	
2	CSA4760001	1	连杆	STEPPING CLAMP CON.ROD	
3	CSA4763001	1	垫圈	WASHER STEPPING CLAMP CAM	
4	C623033000	1	轴承 6805VV	BALL BEARING, 6805VV	
5	CS23651001	2	固定螺钉 M6X6	SET SCREW, SOCKET (FT) M6X6	
6	C062400616	2	螺钉 M4X6	SCREW PAN M4X6	
7	CSA4761001	1	滚轮轴	ROLLER SHAFT STEPPING CLAMP	
8	CSA4762001	1	滚轮	ROLLER STEPING CLAMP	
9	CSA4302001	2	垫圈	WASHER	
10	C021060106	1	螺母 M6	NUT 1 M6	
11	CSA4764001	1	压臂 R	STEPPING CLAMP ARM R	
12	C017061216	1	螺栓 M6X12	BOLT M6X12	
13	CSA4765001	1	压臂 F	STEPPING CLAMP ARM F	
14	C012060636	1	螺钉 M6X6	SET SCREW SOCKET (FT) M6X6	
15	CS23651001	1	固定螺钉 M6X6	SET SCREW, SOCKET (FT) M6X6	
16	CSA4766001	1	压臂轴套 F	BUSH STEPPING CLAMP F	
17	CSA4767001	1	压臂轴套 R	BUSH STEPPING CLAMP R	
18	CSA4768001	1	间歇连杆 A	BUSH STEPPING CLAMP R	
19	CSA4769001	4	段螺钉 6	SHOULDER SCREW 6	
20	C062300416	4	螺钉 M3X4	SCREW, PAN M3X4	
21	CSA4770001	1	间歇连杆 B	STEPPING CLAMP LINK B	
22	CSA4772001	1	间歇联杆	STEPPING CLAMP LINK	
23	CSA4773001	1	联杆轴	SHAFT STEPPING CLAMP LINK	
24	C012060636	1	螺钉 M6X6	SET SCREW SOCKET (FT) M6X6	
25	C012400436	1	螺钉 M4X4	SET SCREW SOCKET (FT) M4X4	
26	CSA4777001	1	联接板	STEPPING CLAMP LIFTER LINK	
27	CSA4771001	1	联接板轴	SHAFT STEPPING CLAMP LIFT LINK	
28	CSA2161001	1	垫圈	WASHER	
29	C048080142	1	轴用挡圈 C8	RETAINING RING EXTERNAL C8	
30	C012060636	1	螺钉 M6X6	SET SCREW SOCKET (FT) M6X6	
31	C012400436	1	螺钉 M4X4	SET SCREW SOCKET (FT) M4X4	
32	CSA4779001	1	间歇提升杆	STEPPING CLAMP LIFTER	
33	CSA4781001	1	提升杆滑轮	ROLLER STEPPING CLAMP LIFTER	
34	C141362001	1	滚轮	ROLLER	
35	CSA4780001	1	提升杆轴	SHAFT STEPPING CLAMP LIFTER	
36	C012060636	1	螺钉 M6X6	SET SCREW SOCKET (FT) M6X6	
37	CS25310101	1	螺钉 M4	SCREW, FLAT M4	
38	CSA4775001	1	提升连杆	STEPPING CLAMP LIFTER ROD	
39	CSA4853001	1	提升连杆接头	JOINT STEPPING CLAMP LIFTER	
40	CSA2663001	2	接头组件 R	BALL JOINT ASSY	
41	C021060306	2	六角螺母 M6	NUT 3 M6	
42	CSA3227001	1	螺母 M6	NUT(FT),M6	
43	CSA4776001	1	段螺钉	SHOULDER SCREW	
44	CS32462001	1	段螺钉 B M6	SHOULDER SCREW, B ;M6	
45	C017065002	1	螺栓 M6X50	BOLT M6X50	
46	C021060106	1	螺母 M6	NUT 1 M6	
47	CSA4778001	1	压紧杆接头	PRESSER BAR CLAMP	
48	C018400836	1	螺栓 M4X8	BOLT SOCKET M4X8	
49	CSA1174001	1	调节螺拴 M14	PESSER ADJUSTING SCREW, M14	
50	CSA1175001	1	调节螺母 M14	ADJUST SCREW NUT	
51	CSA5300001	1	弹簧	PRESSER BAR SPRING	
52	CS10112001	1	弹簧导向	PRESSER BAR SPRING GUIDE	
53	CSA5301001	1	弹簧管套	COLLAR PRESSER BAR SPRING	
54	CSA2195001	1	压紧杆轴套	PRESSER BAR BUSH	
55	C012060536	1	螺钉 M6X5	SET SCREW SOCKET (FT) M6X5	
56	C111466101	1	压紧杆	PRESSER BAR	
57	C* P. 67	1	压脚	WORK CLAMP	
58	CS13399001	1	螺钉 SM3.57X12	SCREW, SM3.57X12	
59	C151439102	1	垫圈	WASHER	

D2 . 抬压装置 / Work clamp lifter mechanism

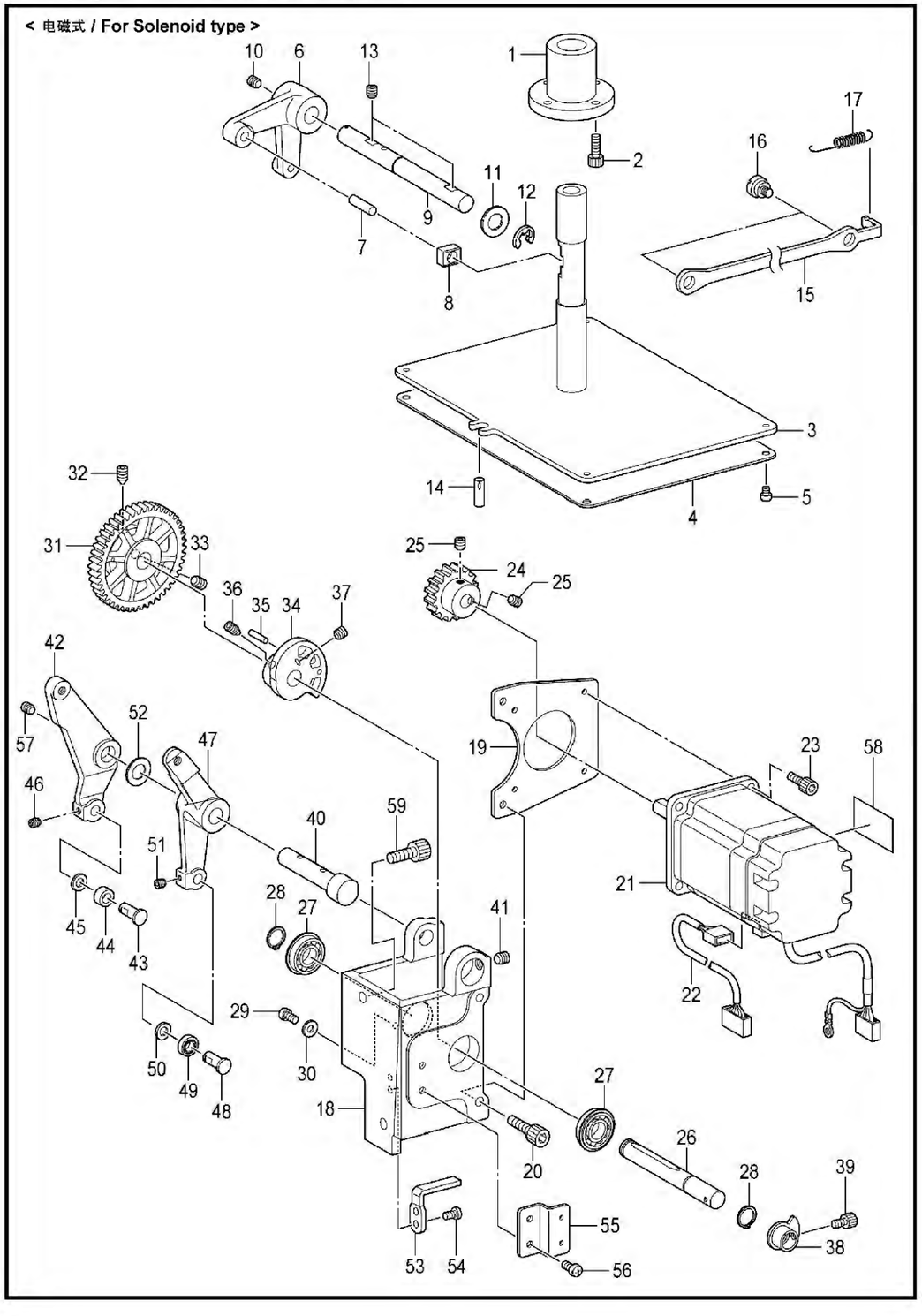

D2. 抬压装置 / Work clamp lifter mechanism

参照号	零部件序号	数量	零部件名称	NAME OF PARTS	RM
			＜电磁式＞	**<For Solenoid type>**	
1	CSA4729001	1	滑杆轴套	SLIDE BUSH	
2	C018401036	4	螺栓 **M4X10**	BOLT SOCKET M4X10	
3	CSA4731001	1	压脚提升板组件	WORK CLAMP LIFTER PLATE ASSY	
4	CSA4734001	1	底座板 **E**	SEAT E	
5	C062400416	4	螺钉 **M4X4**	SCREW, PAN M4X4	
6	CSA4736001	1	压脚提升杆	WORK CLAMP LIFTER LEVER	
7	C152744001	1	销	PIN	
8	C102630001	1	针杆接头滑块	NEEDLE BAR GUIDE SLIDE BLOCK	
9	CSA4737001	1	提升杆轴 **B**	WORK CLAMP LEVER SHAFT B	
10	C012060636	1	螺钉 **M6X6**	SET SCREW SOCKET (FT) M6X6	
11	CS20356001	1	平垫圈 **10**	WASHER, PLAIN 10	
12	C048080342	1	挡圈 **E8**	RETAINING RING E8	
13	C012060636	2	螺钉 **M6X6**	SET SCREW SOCKET (FT) M6X6	
14	C118208001	1	带槽销	DOWEL PIN	
15	CSA4738001	1	压脚提升杆	WORK CLAMP LIFTER LINK	
16	CSA3438001	2	段螺钉	LINK SHOULDER SCREW	
17	CSA4739001	1	弹簧	WORK CLAMP SPRING	
18	CSA4741101	1	马达座	MOTOR BRACKET	
19	CSA4742001	1	压脚马达板	WORK CLAMP MOTOR PLATE	
20	C018501036	2	螺栓 **M5X10**	BOLT SOCKET M5X10	
21	CSA4826201	1	脉冲马达组件 **P**	PULSE MOTOR ASSY P	
22	CSA4828001	1	马达端线 **P**	MOTOR HARNESS P	
23	C018401036	4	螺栓 **M4X10**	BOLT SOCKET M4X10	
24	CSA4743001	1	驱动齿轮	WORK CLAMP DRIVING GEAR	
25	C012060636	2	螺钉 **M6X6**	SET SCREW SOCKET (FT) M6X6	
26	CSA4744001	1	压脚支点轴	WORK CLAMP FULCRUM SHAFT	
27	CSA4647001	2	球轴承 **6900ZZNR**	BALL BEARING 6900ZZNR	
28	C048100142	2	轴用挡圈 **C10**	RETAINING RING EXTERNAL C10	
29	C062400616	1	螺钉 **M4X6**	SCREW PAN M4X6	
30	C025040236	1	平垫圈 **M4**	WASHER PLAIN M 4	
31	CSA4745001	1	凸轮齿轮	WORK CLAMP CAM GEAR	
32	C016061031	1	螺钉 **M6X10**	SET SCREW SOCKET (CN) M6X10	
33	C012060636	1	螺钉 **M6X6**	SET SCREW SOCKET (FT) M6X6	
34	CSA4746001	1	压脚凸轮	WORK CLAMP CAM	
35	CS35079000	1	滚针 **3X11.8**	NEEDLE ROLLER, 3X11.8	
36	C016061031	1	螺钉 **M6X10**	SET SCREW SOCKET (CN) M6X10	
37	C012060636	1	螺钉 **M6X6**	SET SCREW SOCKET (FT) M6X6	
38	CSA4747001	1	压脚原点挡块	WORK CLAMP H-POSITION DOG	
39	C018400636	1	螺栓 **M4X6**	BOLT SOCKET M4X6	
40	CSA4748001	1	压脚柄轴	WORK CLAMP LEVER SHAFT	
41	C012060636	1	螺钉 **M6X6**	SET SCREW SOCKET (FT) M6X6	
42	CSA6210001	1	间歇驱动杆	STEPPING W-CLAMP DRIVING LEVER	
43	CSA3441001	1	抬压滚轮轴	W-CLAMP LIFTER ROLLER SHAFT	
44	C070696800	1	轴承 **R-696ZZ**	BALL BEARING RADIAL 696ZZ	
45	C109763001	1	垫圈	WASHER	
46	C012500536	1	螺钉 **M5X5**	SET SCREW SOCKET (FT) M5X5	
47	CSA4750001	1	压脚驱动杆	WORK CLAMP DRIVING SHAFT	
48	CSA3441001	1	抬压滚轮轴	W-CLAMP LIFTER ROLLER SHAFT	
49	C070696800	1	轴承 **R-696ZZ**	BALL BEARING RADIAL 696ZZ	
50	C109763001	1	垫圈	WASHER	
51	C012500536	1	螺钉 **M5X5**	SET SCREW SOCKET (FT) M5X5	
52	CS20356001	1	平垫圈 **10**	WASHER, PLAIN 10	
53	CSA4752001	1	凸轮定位	WORK CLAMP CAM STOPPER	
54	C062400616	2	螺钉 **M4X6**	SCREW PAN M4X6	
55	CSA4753001	1	压脚传感器板	WORK CLAMP SENSOR PLATE	
56	C062400616	2	螺钉 **M4X6**	SCREW PAN M4X6	
57	C012060636	1	螺钉 **M6X6**	SET SCREW SOCKET (FT) M6X6	
58	CSA4224001	1	注意符号 **30X40**	MARK,ATTENTION 30X40	
59	C018061236	2	螺栓 **M6X12**	BOLT SOCKET M6X12	

D3 . 抬压装置 / Work clamp lifter mechanism

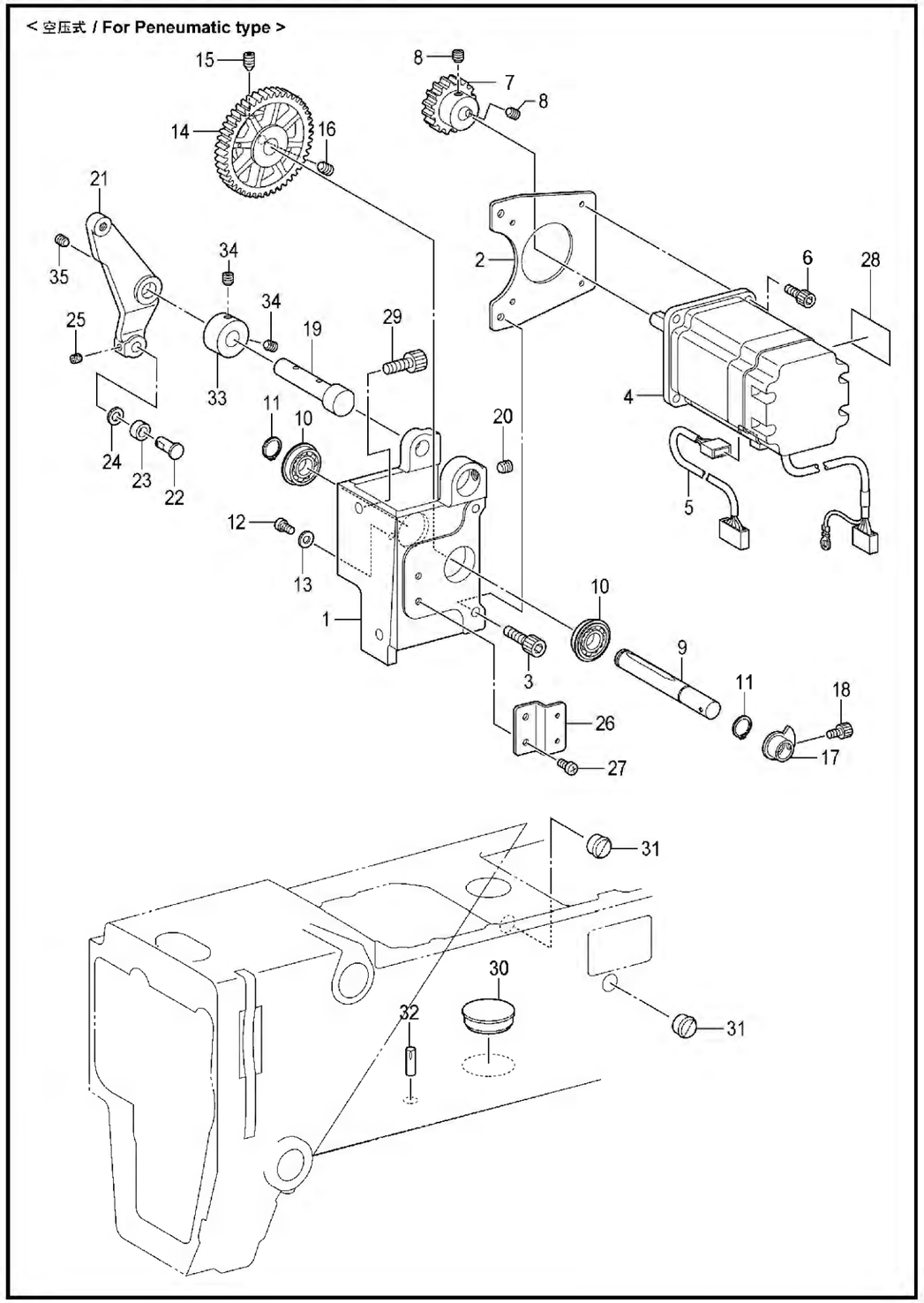

D3. 抬压装置 / Work clamp lifter mechanism

参照号	零部件序号	数量	零部件名称	NAME OF PARTS	RM
			<空压式>	<For Peneumatic type>	
1	CSA4741101	1	马达座	MOTOR BRACKET	
2	CSA4742001	1	压脚马达板	WORK CLAMP MOTOR PLATE	
3	C018501036	2	螺栓 M5X10	BOLT SOCKET M5X10	
4	CSA4826201	1	脉冲马达组件 P	PULSE MOTOR ASSY P	
5	CSA4828001	1	马达端线 P	MOTOR HARNESS P	
6	C018401036	4	螺栓 M4X10	BOLT SOCKET M4X10	
7	CSA4743001	1	驱动齿轮	WORK CLAMP DRIVING GEAR	
8	C012060636	2	螺钉 M6X6	SET SCREW SOCKET (FT) M6X6	
9	CSA4744001	1	压脚支点轴	WORK CLAMP FULCRUM SHAFT	
10	CSA4647001	2	球轴承 6900ZZNR	BALL BEARING 6900ZZNR	
11	C048100142	2	轴用挡圈 C10	RETAINING RING EXTERNAL C10	
12	C062400616	1	螺钉 M4X6	SCREW PAN M4X6	
13	C025040236	1	平垫圈 M4	WASHER PLAIN M 4	
14	CSA4745001	1	凸轮齿轮	WORK CLAMP CAM GEAR	
15	C016061031	1	螺钉 M6X10	SET SCREW SOCKET (CN) M6X10	
16	C012060636	1	螺钉 M6X6	SET SCREW SOCKET (FT) M6X6	
17	CSA4747001	1	压脚原点挡块	WORK CLAMP H-POSITION DOG	
18	C018400636	1	螺栓 M4X6	BOLT SOCKET M4X6	
19	CSA4748001	1	压脚柄轴	WORK CLAMP LEVER SHAFT	
20	C012060636	1	螺钉 M6X6	SET SCREW SOCKET (FT) M6X6	
21	CSA6210001	1	间歇驱动杆	STEPPING W-CLAMP DRIVING LEVER	
22	CSA3441001	1	抬压滚轮轴	W-CLAMP LIFTER ROLLER SHAFT	
23	C070696800	1	轴承 R-696ZZ	BALL BEARING RADIAL 696ZZ	
24	C109763001	1	垫圈	WASHER	
25	C012500536	1	螺钉 M5X5	SET SCREW SOCKET (FT) M5X5	
26	CSA4753001	1	压脚传感器板	WORK CLAMP SENSOR PLATE	
27	C062400616	2	螺钉 M4X6	SCREW PAN M4X6	
28	CSA4224001	1	注意符号 30X40	MARK,ATTENTION 30X40	
29	C018061236	2	螺栓 M6X12	BOLT SOCKET M6X12	
30	C159163000	1	橡皮塞 29	RUBBER CAP 29	
31	C104821001	2	橡皮塞 10.5	RUBBER CAP, 10.5	
32	C118550001	1	带槽销	PIN DOWEL	
33	CSA4757101	1	紧圈	SET SCREW COLLAR	
34	C012060636	2	螺钉 M6X6	SET SCREW SOCKET (FT) M6X6	
35	C012060636	1	螺钉 M6X6	SET SCREW SOCKET (FT) M6X6	

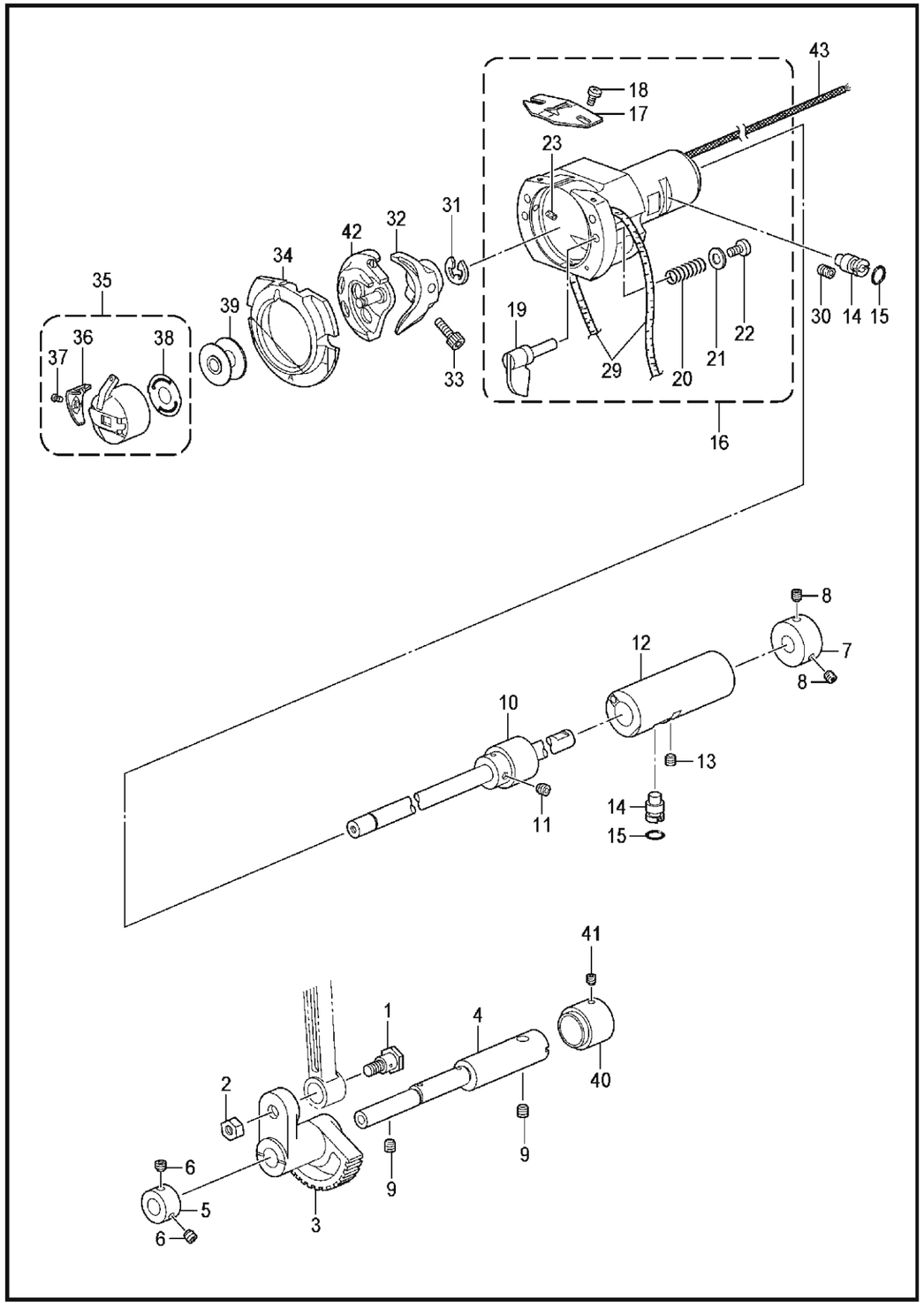

参照号	零部件序号	数量	零部件名称	NAME OF PARTS	RM
1	CSA3226001	1	段螺钉	SHOULDER SCREW	
2	CSA3227001	1	螺母 M6	NUT(FT),M6	
3	CSA3228101	1	摆动齿轮	ROCK GEAR	
4	CSA4782001	1	摆动齿轮轴	ROCK GEAR SHAFT	
5	CSA3231001	1	紧圈 B	SET SCREW COLLAR,B	
6	C012060536	2	螺钉 M6X5	SET SCREW, SOCKET (FT) M6X5	
7	CSA3233001	1	紧圈	SET SCREW COLLAR	
8	CS23651001	2	固定螺钉 M6X6	SET SCREW, SOCKET (FT) M6X6	
9	C012060636	2	螺钉 M6X6	SET SCREW SOCKET (FT) M6X6	
10	CSA4783101	1	下轴组件	LOWER SHAFT ASSY	
11	C012500536	1	螺钉 M5X5	SET SCREW SOCKET (FT) M5X5	
12	CSA6216001	1	下轴轴套	LOWER SHAFT BUSH	
13	C012060636	1	螺钉 M6X6	SET SCREW SOCKET (FT) M6X6	
14	CSA3238101	2	旋梭调节轴	ADJUSTING STUD	
15	C081003670	2	O形圈 PW3	O RING PW3	
16	CSA6220001	1	大旋梭基座组件 G	SHUTTLE RACE BASE ASSY G	
17	CS02429201	1	旋梭线导向	SHUTTLE RACE THREAD GUIDE	
18	CSA4199001	2	螺钉 M3X4	SCREW M3X4	
19	CSA3241001	2	大旋梭固定柄	S-RACE BASE SETTING CLAW	
20	C152684101	2	弹簧	COMPRESSION SPRING	
21	C026030136	2	平垫圈 S3	WASHER PLAIN S 3	
22	C062300616	2	螺钉 M3X6	SCREW PAN M3X6	
23	C153050000	2	油毡	S-RACE BASE FELT	
29	CS59886001	2	油毡 L=360	FELT, L=360	
30	C012060636	1	螺钉 M6X6	SET SCREW SOCKET (FT) M6X6	
31	C048070342	1	挡圈 E7	RETAINING RING E7	
32	CSA3284101	1	梭托 D	DRIVER,D	
33	C018501232	1	螺栓 M5X12	BOLT SOCKET M5X12	
34	C* P. 66	1	外旋梭	SHUTTLE RACE BASE	
35	C* P. 66	1	梭芯套组件	BOBBIN CASE ASSY	
36	C* P. 66	1	调节弹簧	TENSION SPRING	
37	C* P. 66	1	螺钉	SCREW	
38	C* P. 66	1	防空转弹簧	ANTI-SPIN SPRING	
39	C* P. 66	1	梭芯	BOBBIN	
40	CSA3283101	1	紧圈 R	SET SCREW COLLAR,R	
41	C012500536	1	螺钉 M5X5	SET SCREW SOCKET (FT) M5X5	
42	C* P. 66	1	中旋梭	SHUTTLE HOOK	
43	CS32557000	1	油线 4X4 L=330	WICK, 4X4 L=330	

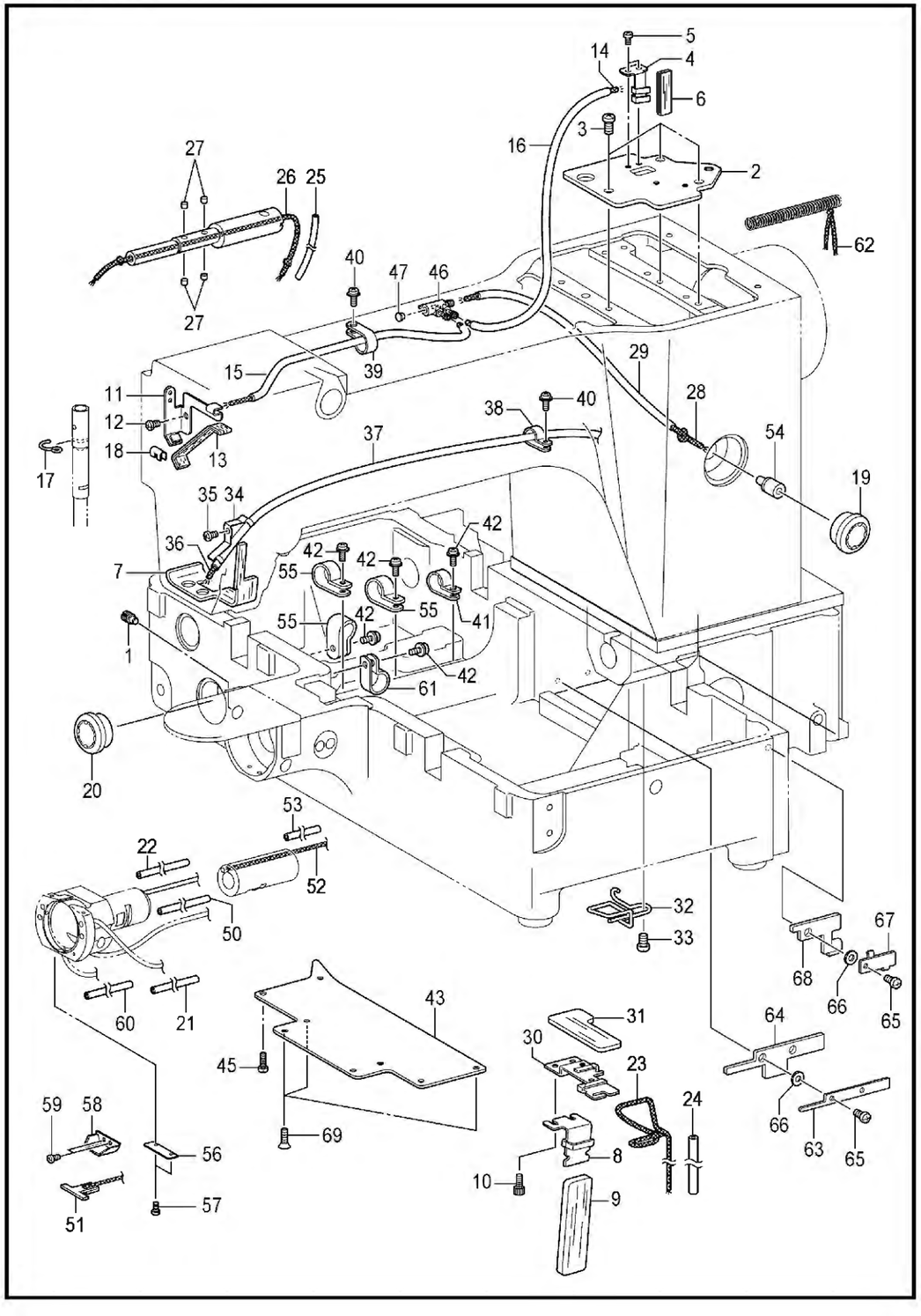

参照号	零部件序号	数量	零部件名称	NAME OF PARTS	RM
1	CSA3244001	1	螺钉	SET SCREW	
2	CSA4785001	1	曲柄盖	CRANK COVER	
3	C062061016	3	螺钉 M6X10	SCREW PAN M6X10	
4	CSA4787001	1	曲柄供油板	CRANK WICK PLATE	
5	C062400616	2	螺钉 M4X6	SCREW PAN M4X6	
6	CSA5294001	1	毡油线 L=90	FLAT WICK L=90	
7	CSA4786101	1	油毡	FELT	
8	CSA3503201	1	下轴给油支架	LOWER SHAFT WICK SUPPORT	
9	CSA3504201	1	下轴齿轮油毡	LOWER SHAFT GEAR FELT	
10	C018400636	2	螺栓 M4X6	BOLT SOCKET M4X6	
11	CSA4788001	1	供油支架	WICK SUPPORT	
12	C062400616	1	螺钉 M4X6	SCREW PAN M4X6	
13	CSA6593001	1	毡油线 L=180	FLAT WICK, L=180	
14	CSA6580001	1	油线 L=780	WICK L=780	
15	CS07459100	1	油管 L=240	OIL TUBE, L=240	
16	CSA6576001	1	油管 L=210	OIL TUBE, L=210	
17	CSA6087001	1	油线挂钩	WICK SUPPORT	
18	C104567101	1	油线支架	WICK SUPPORT	
19	CS49992000	1	油视窗	OIL GAUGE WINDOW	
20	C152948001	1	油视窗	OIL GAUGE WINDOW	
21	CS50529000	1	油管 L=320	OIL TUBE, L=320	
22	CS07459100	1	油管 L=240	OIL TUBE, L=240	
23	CSA5292101	1	油线 L=680	WICK L=680	
24	CS53175000	1	油管 L=450	OIL TUBE, L=450	
25	CSA5072001	1	油管 L=120	OIL TUBE L=120	
26	CSA6578001	1	油线 6X6 L=300	WICK 6X6 L=300	
27	CS09043000	4	油毡	FELT	
28	CS49982000	1	油线 4X4 L=400	WICK, 4X4 L=400	
29	CS48189000	1	油管 L=280	OIL TUBE, L=280	
30	CSA3246001	1	齿轮供油支架	GEAR WICK SUPPORT	
31	CSA3280001	1	油毡	GEAR FELT	
32	CSA4789101	1	油线夹 B	LOWER SHAFT WICK SUPPORT B	
33	C062060816	1	螺钉 M6X8	SCREW PAN M6X8	
34	C145547001	1	回油管管托	TUBE HOLDER	
35	C062400616	1	螺钉 M4X6	SCREW PAN M4X6	
36	CS49957000	1	油线 4X4 L=700	WICK, 4X4 L=700	
37	CSA4791101	1	油管 L=620	OIL TUBE L=620	
38	C149547000	1	压线板	CORD HOLDER, 4N	
39	C525567000	1	电线夹 #8	CORD HOLDER, #8	
40	C0A5401006	2	螺栓(带垫圈) M4X10DB	SCREW PAN (S/P WASHER) M4X10	
41	C525664000	1	电线夹 #6	CORD HOLDER, #6	
42	C0A5401006	5	螺栓(带垫圈) M4X10DB	SCREW PAN (S/P WASHER) M4X10	
43	CSA6211001	1	油盖	OIL COVER	
45	C062401016	5	螺钉 M4X10	SCREW PAN M4X10	
46	CS38265000	1	管接头 L	TERMINAL, L	
47	C142274101	1	橡皮塞 4.2	RUBBER CAP, 4.2	
50	CSA6263001	1	油管 L=320	OIL TUBE L=320	
51	CSA6260001	1	油毡组件	FELT ASSY	
52	CS00400000	1	油线 2.5X200	WICK, 2.5X200	
53	CSA6579001	1	油管 L=110	OIL TUBE, L=110	
54	CSA5339101	1	油嘴管	OIL FEEDING PIPE	
55	C525567000	3	电线夹 #8	CORD HOLDER, #8	
56	CSA3242001	1	油毡支架	FELT HOLDER	
57	CS44924001	2	固定螺钉 M3X5.5	SCREW, M3X5.5	
58	CSA3274101	1	油毡支架	FELT HOLDER	
59	CS47307001	2	螺钉 M3X4	SCREW, M3X4	

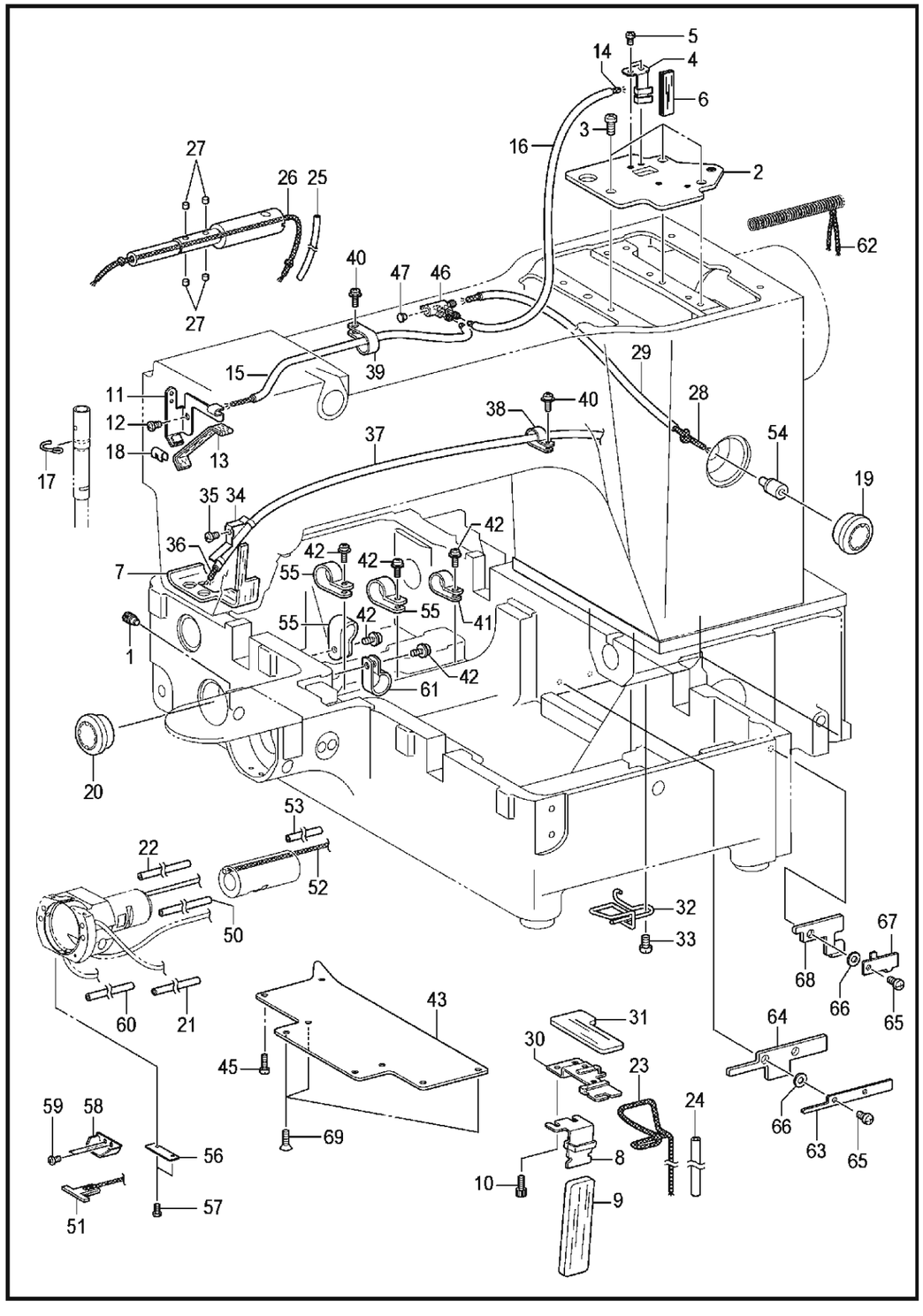

参照号	零部件序号	数量	零部件名称	NAME OF PARTS	RM
60	CSA6577001	1	油管 L=300	OIL TUBE L=300	
61	C552907000	1	电线夹 #10	CORD HOLDER, #10	
62	CSA6572001	1	油线 L=140	WICK L=140	
63	CSA6581001	1	油毡压板 L	WICK SUPPORT L	
64	CSA6583001	1	底板油毡 L	FELT BED L	
65	C062400616	3	螺钉 M4X6	SCREW PAN M4X6	
66	C028040246	3	弹簧垫圈 2-4	WASHER SPRING 2-4	
67	CSA6582001	1	油毡压板 R	WICK SUPPORT R	
68	CSA6584001	1	底板油毡 R	FELT BED R	
69	CS25310101	3	螺钉 M4	SCREW, FLAT M4	

G . 穿线装置/ Threading mechanism

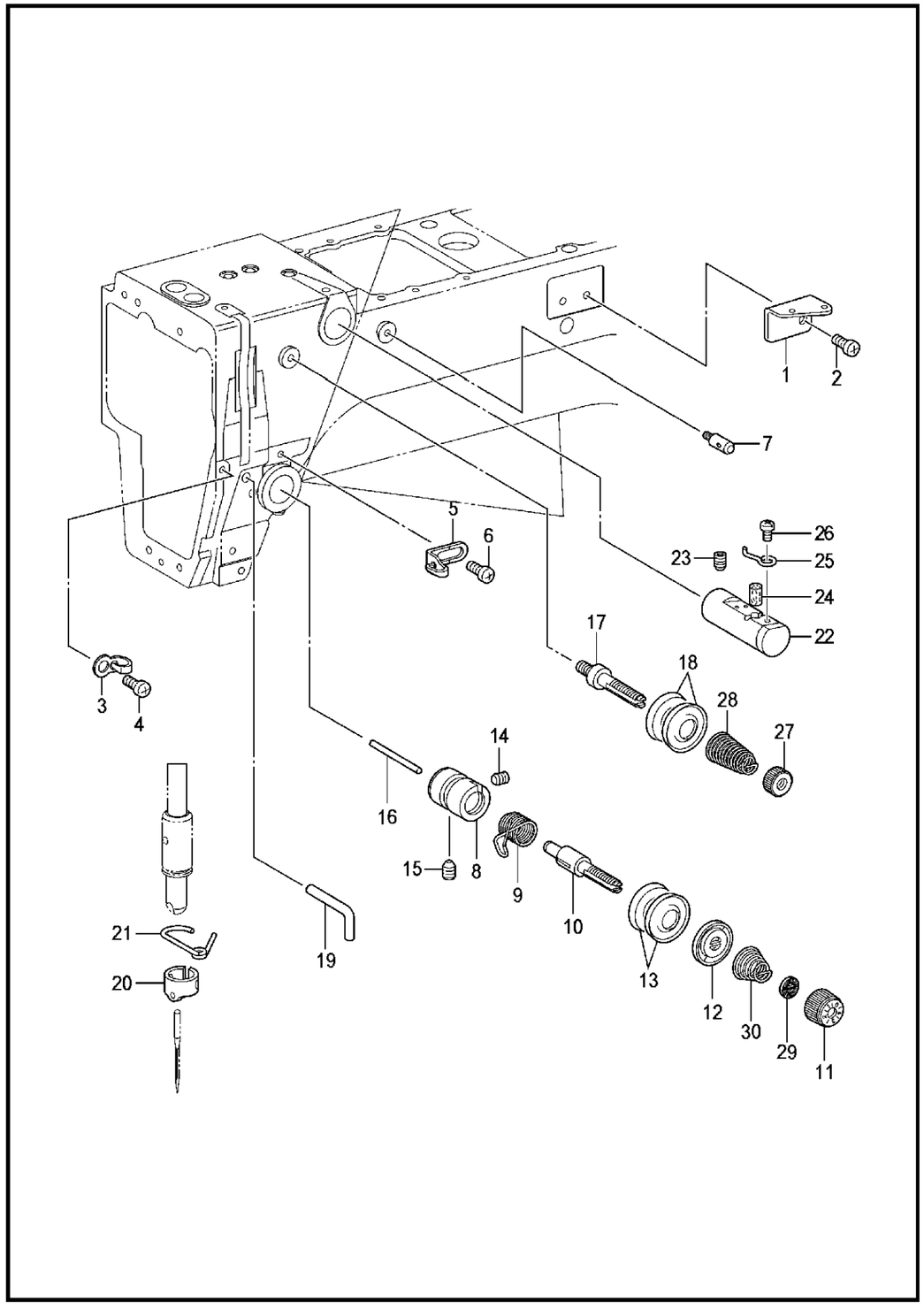

G. 穿线装置 / Threading mechanism

参照号	零部件序号	数量	零部件名称	NAME OF PARTS	RM
1	CSA3250001	1	过线导向 A	ARM THREAD GUIDE,A	
2	C062500616	1	螺钉 M5X6	SCREW PAN M5X6	
3	CSA4333001	1	过线导向 B	ARM THREAD GUIDE,B	
4	C062500616	1	螺钉 M5X6	SCREW PAN M5X6	
5	CSA6391001	1	过线器 C	ARM THREAD GUIDE C	
6	C062500616	1	螺钉 M5X6	SCREW PAN M5X6	
7	C153049001	1	面线导向杆	UPPER THREAD GUIDE STUD	
8	CSA3254001	1	夹线座	TENSION BRACKET	
9	C* P. 66	1	调节弹簧	THREAD TAKE-UP SPRING	
10	CSA3255001	1	夹线杆轴	TENSION STUD	
11	CS31032001	1	压线螺母	TENSION NUT	
12	C159805001	1	夹线压盘	TENSION DISC PRESSER	
13	C145446001	1	夹线盘	DISC, TENSION	
14	C100402004	1	固定螺钉 SM3.57	SET SCREW, SM3.57	
15	CSA4143001	1	螺钉 M6X6	SET SCREW, (FT) M6X6	
16	CS12699000	1	松线销	TENSION RELEASE PIN	
17	CSA3256001	1	夹线杆轴 A	TENSION STUD,A	
18	C145446001	2	夹线盘	DISC, TENSION	
19	C159224001	1	线钩	THREAD GUIDE, ARM	
20	C* P. 67	1	针杆线导向	NEEDLE BAR THREAD GUIDE	
21	CSA3258001	1	针杆轴套线导向 D	N-BAR BUSH THREAD GUIDE,D	
22	C152881001	1	线冷却器组件	NEEDLE COOLER ASSY	
23	C012060636	1	螺钉 M6X6	SET SCREW SOCKET (FT) M6X6	
24	C152883000	1	油毡 8X15.5	FELT, 8X15.5	
25	C152884001	1	过线钩	NEEDLE COOLER THREAD GUIDE	
26	C062670412	1	螺钉 SM3.57-40X4	SCREW PAN SM3.57-40X4	
27	C100136001	1	夹线螺母	TENSION NUT	
28	CSA4146001	1	弹簧	SUB TENSION SPRING	
29	CS12441001	1	止动垫圈	WASHER	
30	C* P. 66	1	夹线簧	TENSION SPRING	

H . 卷线装置 / Bobbin winder mechanism

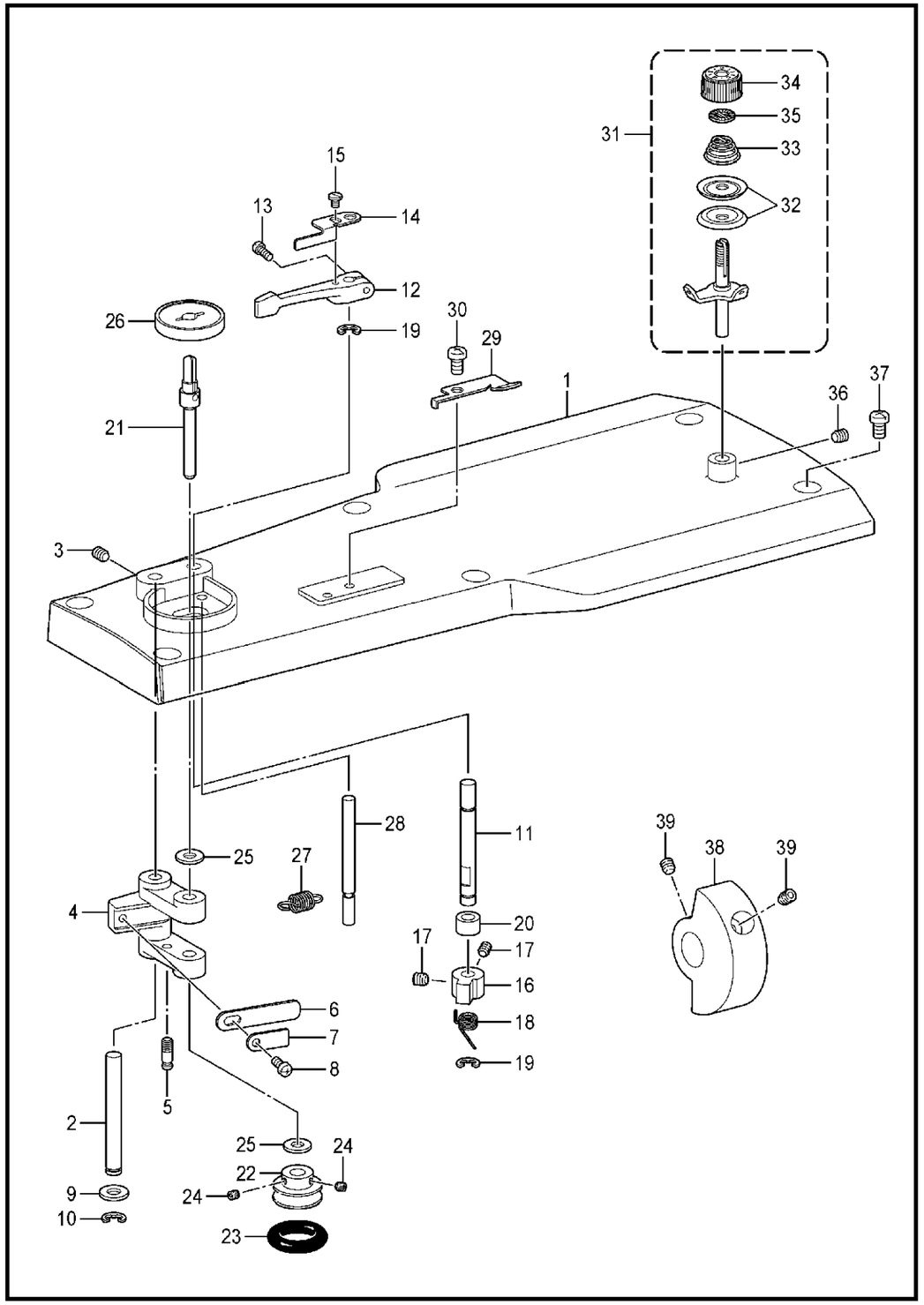

H. 卷线装置 / Bobbin winder mechanism

参照号	零部件序号	数量	零部件名称	NAME OF PARTS	RM
1	CSA4795001	1	顶盖	TOP COVER	
2	CSA3290001	1	卷线手柄轴	SHAFT,BW-LEVER	
3	C012500536	1	螺钉 **M5X5**	SET SCREW SOCKET (FT) M5X5	
4	CSA3291001	1	卷线手柄	BOBBIN WINDER LEVER	
5	CSA4171001	1	弹簧挂钩	SPRING HOOK	
6	C152936001	1	板弹簧	PLATE SPRING	
7	C152937001	1	垫圈	WASHER	
8	C062350616	1	螺钉 **M3.5X6**	SCREW PAN M3.5X6	
9	C159486001	1	垫圈	WASHER	
10	C048050342	1	挡圈 **E5**	RETAINING RING E5	
11	CSA3293001	1	卷线卡爪轴	STUD,B-WINDER CLAW	
12	CSA1984001	1	梭芯压臂柄	BOBBIN PRESSER ARM	
13	C062401216	1	螺钉 **M4X12**	SCREW PAN M4X12	
14	CSA3294001	1	梭芯压杆	BOBBIN PRESSER	
15	CS23418002	1	螺钉 **M4X5**	SCREW, M4X5	
16	CSA3295001	1	卷线卡爪	CLAW,B-WINDER	
17	C012400436	2	螺钉 **M4X4**	SET SCREW SOCKET (FT) M4X4	
18	CS10438001	1	弹簧	SPRING, TWIST	
19	C048050342	2	挡圈 **E5**	RETAINING RING E5	
20	CSA4796001	1	垫片	SPACER COLLER	
21	CSA3296001	1	卷线轴	BOBBIN WINDER SHAFT	
22	CSA3297001	1	卷线器	WHEEL,B-WINDER	
23	C120448001	1	橡皮圈	BOBBIN WINDER RUBBER BAND	
24	C012400436	2	螺钉 **M4X4**	SET SCREW SOCKET (FT) M4X4	
25	C159486001	2	垫圈	WASHER	
26	CSA1988001	1	梭芯座	BOBBIN SUPPORT	
27	CS10268001	1	拉簧	SPRING	
28	CSA3298001	1	止动轴	STPPER SHAFT,B-WINDER	
29	CSA3299001	1	切刀	KNIFE	
30	C062500616	1	螺钉 **M5X6**	SCREW PAN M5X6	
31	CSA1994101	1	卷线器夹线组件	BOBBIN WINDER TENSION ASSY	
32	C145446002	2	夹线盘	DISC, TENSION	
33	C100401022	1	夹线弹簧	TENSION SPRING	
34	CS31032001	1	压线螺母	TENSION NUT	
35	CS12441001	1	止动垫圈	WASHER	
36	C012500536	1	螺钉 **M5X5**	SET SCREW SOCKET (FT) M5X5	
37	C062061016	6	螺钉 **M6X10**	SCREW PAN M6X10	
38	CSA4797101	1	卷线驱动轮	DRIVING WHEEL B-WINDER	
39	CS23651001	2	固定螺钉 **M6X6**	SET SCREW, SOCKET (FT) M6X6	

J . 切线装置 / Thread trimmer mechanism

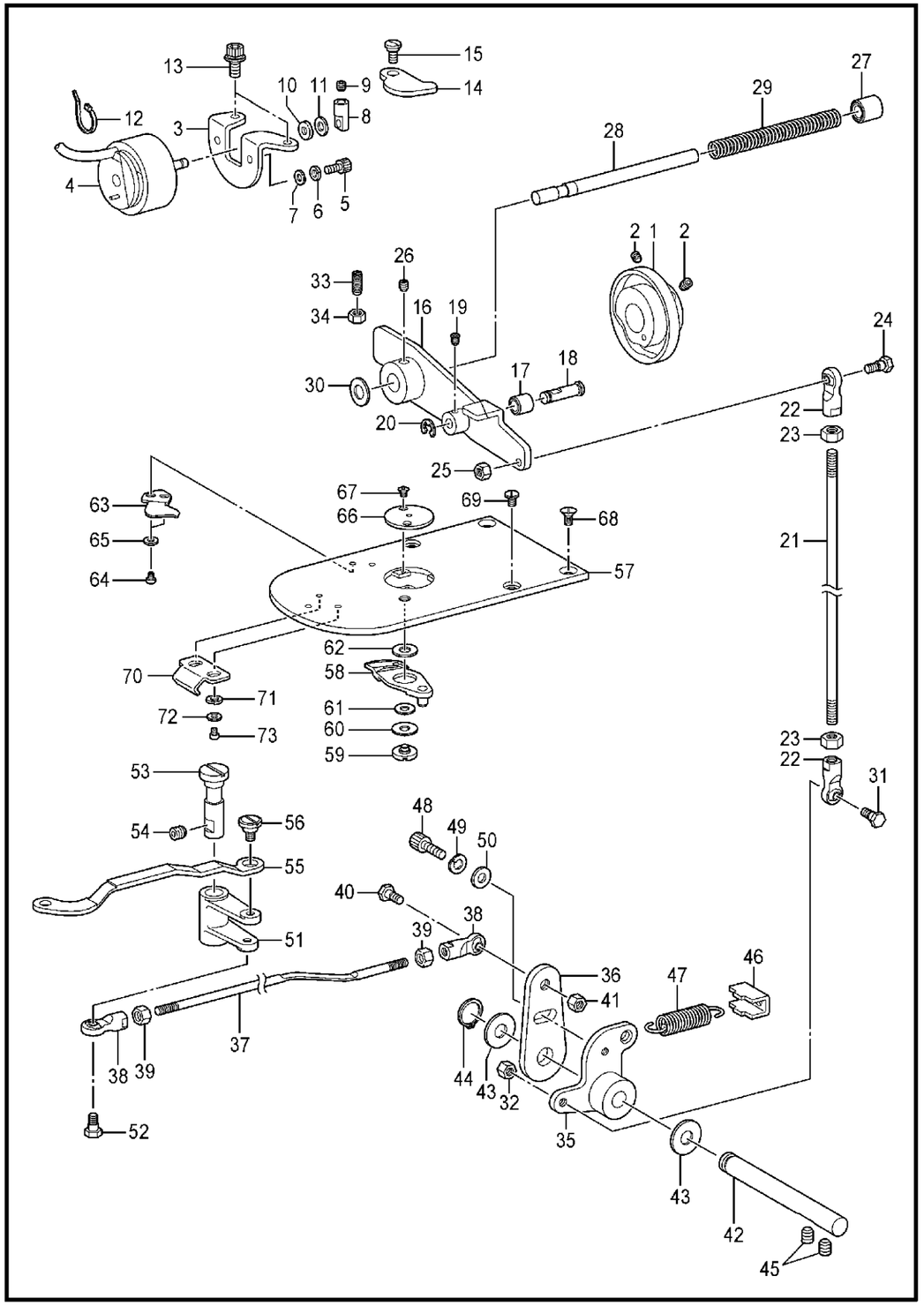

J. 切线装置 / Thread trimmer mechanism

参照号	零部件序号	数量	零部件名称	NAME OF PARTS	RM
1	CSA3301101	1	切线凸轮	THREAD TRIMMER CAM	
2	CS23651001	2	固定螺钉 M6X6	SET SCREW, SOCKET (FT) M6X6	
3	CSA4798001	1	电磁铁安装板	SETTING PLATE SOLENOID	
4	CSA5135001	1	切线电磁铁	THREAD TRIMMER SOLENOID	
5	C017400802	2	螺栓 M4X8	BOLT M4X8	
6	C028040246	2	弹簧垫圈 2-4	WASHER SPRING 2-4	
7	C025040236	2	平垫圈 M4	WASHER PLAIN M 4	
8	CSA3307001	1	电磁铁杆	SOLENOID LEVER	
9	C012400436	1	螺钉 M4X4	SET SCREW SOCKET (FT) M4X4	
10	C154599000	1	电磁铁缓冲垫圈	SOLENOID CUSHION	
11	CS02652001	1	垫圈	WASHER	
12	CS04159000	1	线夹 1M	BAND, 1M	
13	CS55484002	2	螺栓(带垫圈) M5X10	BOLT, SOCKET (S/P WASHER)M5X10	
14	CSA4799001	1	驱动压杆	PUSHING LEVER D-LEVER	
15	CSA3306001	1	段螺钉 7-3	SHOULDER SCREW,7-3	
16	CSA3309101	1	切线驱动杆	TR-DRIVING LEVER	
17	CSA3310001	1	切线滚轮	COLLAR,TR-TRIMMER	
18	CSA3311001	1	切线滚轮轴	COLLAR SHAFT	
19	CS46903001	1	螺钉 M4X5	SET SCREW, M4X5	
20	C048040342	1	挡圈 E4	RETAINING RING E4	
21	CSA3315001	1	切线杆 V	THREAD TRIMMER ROD V	
22	CS32465001	2	接头组件	BALL JOINT ASSY	
23	C021060106	2	螺母 M6	NUT 1 M6	
24	CS32462001	1	段螺钉 B M6	SHOULDER SCREW, B ;M6	
25	C021060306	1	六角螺母 M6	NUT 3 M6	
26	CS23651001	1	固定螺钉 M6X6	SET SCREW, SOCKET (FT) M6X6	
27	C231071001	1	轴套 8X15	BUSH, 8X15	
28	CSA3312001	1	驱动杆导向轴	GUIDE SHAFT	
29	CSA3313101	1	弹簧	SPRING,COMPRESSION	
30	C154596000	1	减震垫圈	CUSHION	
31	CS32462001	1	段螺钉 B M6	SHOULDER SCREW, B ;M6	
32	C021060306	1	六角螺母 M6	NUT 3 M6	
33	CS25475101	1	螺钉 M6X19	SET SCREW, M6X19	
34	C021060106	1	螺母 M6	NUT 1 M6	
35	CSA4546001	1	切线杠杆 V	THREAD TRIMMER LEVER V	
36	CSA3317001	1	切线杠杆 H	THREAD TRIMMER LEVER H	
37	CSA4801001	1	切线杆 H	THREAD TRIMMER ROD H	
38	CS32465001	2	接头组件	BALL JOINT ASSY	
39	C021060106	2	螺母 M6	NUT 1 M6	
40	CS32462001	1	段螺钉 B M6	SHOULDER SCREW, B ;M6	
41	C021060306	1	六角螺母 M6	NUT 3 M6	
42	CSA3319101	1	切线杠杆轴	SHAFT,TR-TRIMMER LEVER	
43	CSA4545001	2	垫片	SPACER	
44	C048080142	1	轴用挡圈 C8	RETAINING RING EXTERNAL C8	
45	C012060636	2	螺钉 M6X6	SET SCREW SOCKET (FT) M6X6	
46	CSA3320101	1	弹簧挂钩	SPRING HOOK	
47	CSA3321001	1	切线复位弹簧	SPRING,EXTENSION	
48	C018501236	1	螺栓 M5X12	BOLT SOCKET M5X12	
49	C028050246	1	弹簧垫圈 2-5	WASHER SPRING 2-5	
50	C146354002	1	垫圈 5	WASHER, PLAIN 5	
51	CSA3324001	1	动刀曲柄	MOVING KNIFE LEVER	
52	CSA3325001	1	段螺钉 6.35-6	SHOULDER SCREW,6.35-6	
53	CSA4802001	1	动刀杆轴	SHAFT MOVABLE KNIFE LEVER	
54	C012060636	1	螺钉 M6X6	SET SCREW SOCKET (FT) M6X6	
55	CSA3327101	1	动刀连杆	M-KNIFE CONNECTING PLATE	
56	CSA4354001	1	段螺钉 6-1.8	SHOULDER SCREW,6-1.8	

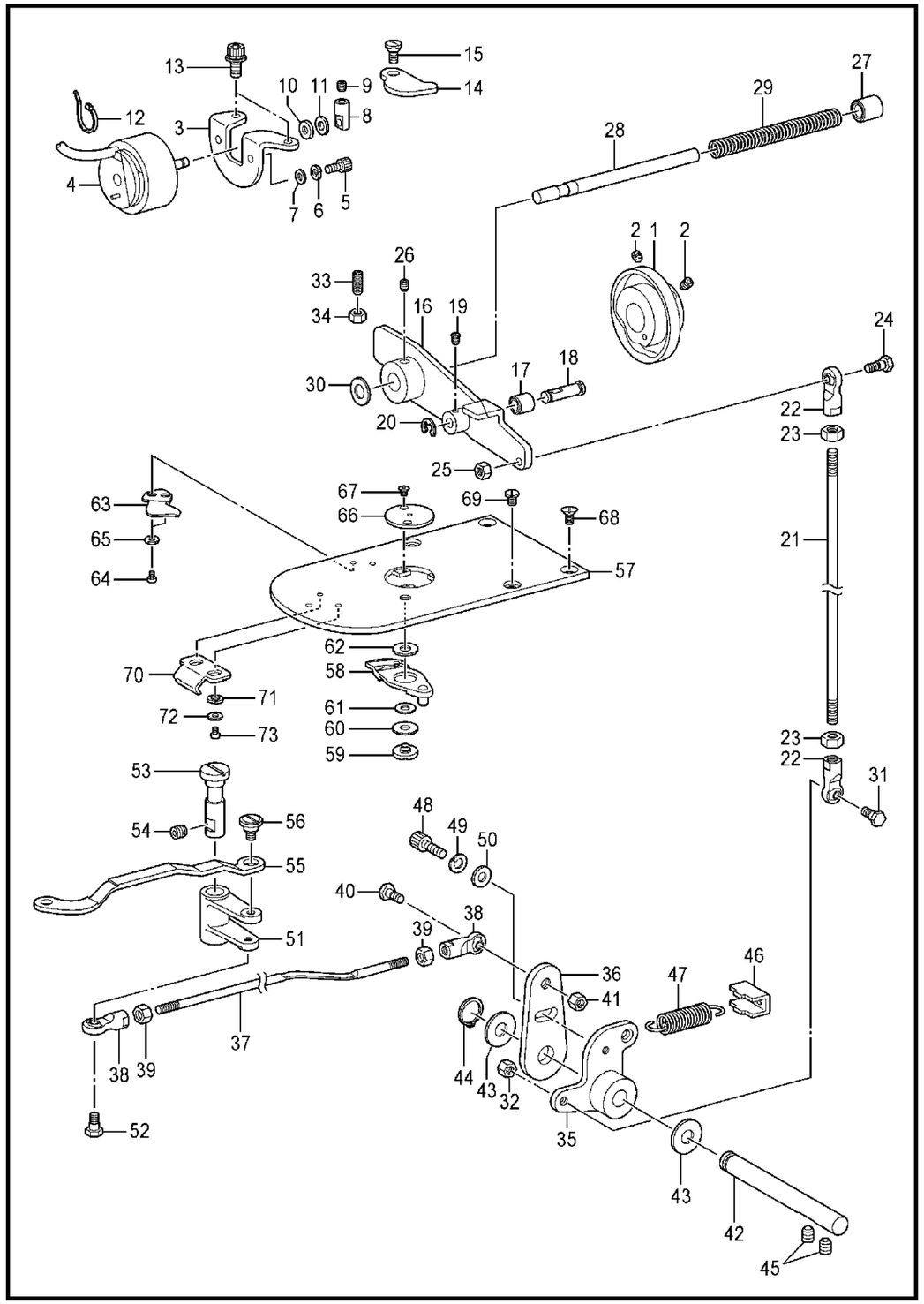

参照号	零部件序号	数量	零部件名称	NAME OF PARTS	RM
57	CSA5157001	1	针板 A	NEEDLE PLATE A	
58	CSA3330101	1	动刀组件 F	MOVABLE KNIFE ASSY F	
59	CSA4518001	1	段螺钉	MOVABLE KNIFE SHOULDER SCREW	
60	CSA4519001	1	动刀圈套	THRUST WASHER	
61	CS00705001	1	动刀圈套	MOVABLE KNIFE COLLAR	
62	CSA6397001	1	垫片 0.2	M-KNIFE SPACER T0.2	
62	CSA3334001	1	垫片 0.3	M-KNIFE SPACER T0.3	
62	CSA6398001	1	垫片 0.4	M-KNIFE SPACER T0.4	
63	CSA3335001	1	定刀 F	FIXED KNIFE F	
64	C062300416	2	螺钉 M3X4	SCREW PAN M3X4	
65	C025030236	2	平垫圈 M3	WASHER PLAIN M 3	
66	C* P. 66	1	针孔板	NEEDLE HOLE PLATE	
67	C100360003	2	螺钉 SM2.38	SCREW	
68	CS25310101	2	螺钉 M4	SCREW, FLAT M4	
69	CSA3538001	2	螺钉 M4X8	SCREW,M4X8	
70	CSA6273001	1	大旋梭盖挂钩 U	SHUTTLE BASE COVER HOOK U	
71	C028030246	2	弹簧垫圈 2-3	WASHER SPRING 2-3	
72	C025030236	2	平垫圈 M3	WASHER PLAIN M 3	
73	C062300416	2	螺钉 M3X4	SCREW PAN M3X4	

K . 扫线装置 / Thread wiper mechanism

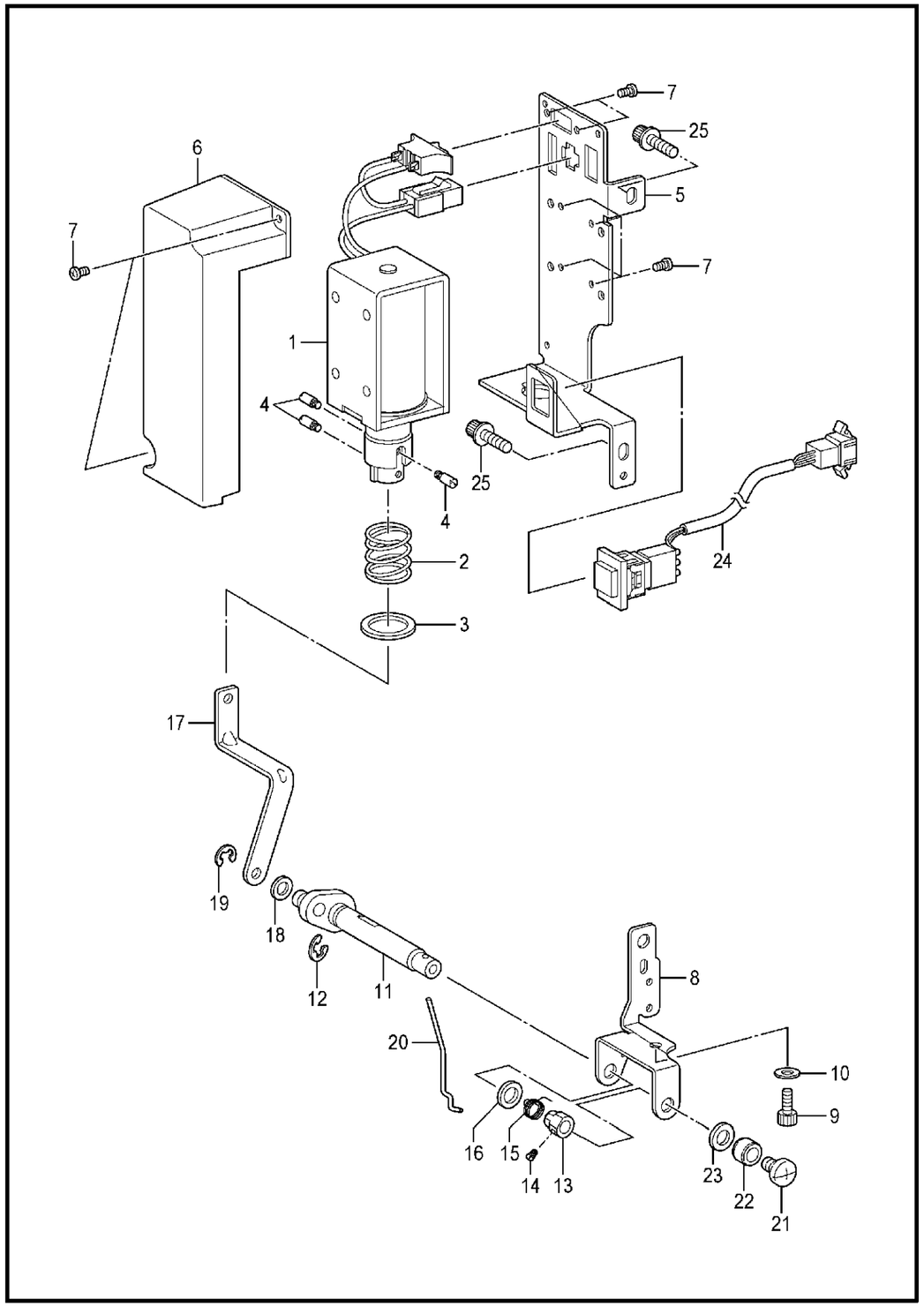

K. 扫线装置 / Thread wiper mechanism

参照号	零部件序号	数量	零部件名称	NAME OF PARTS	RM
1	CSA5208001	1	扫线电磁铁组件	THREAD WIPER SOLENOID ASSY	
2	CS41206001	1	挡线弹簧	THREAD WIPER SPRING	
3	CS41205001	1	平垫圈	WASHER, PLAIN	
4	CS25456001	3	柱塞销	PLUNGER PIN	
5	CSA5217001	1	扫线电磁铁按装板	T-WIPER SOLENOID SETTING PLATE	
6	CSA4806001	1	电磁铁盖	SOLENOID COVER	
7	C062300616	8	螺钉 M3X6	SCREW PAN M3X6	
8	CSA5218001	1	扫线轴托架	THREAD WIPER SHAFT BRACKET	
9	C018400836	1	螺栓 M4X8	BOLT SOCKET M4X8	
10	C025040236	1	平垫圈 M4	WASHER PLAIN M 4	
11	CSA1967001	1	扫线曲轴组件	THREAD WIPER CRANK ASSY	
12	C048040342	1	挡圈 E4	RETAINING RING E4	
13	CS25454001	1	螺纹紧圈	SET SCREW COLLAR	
14	CS25279001	1	螺钉 M3.5-5	SET SCREW, (CP) M3.5-5	
15	CSA2287001	1	弹簧	SPRING	
16	C149097000	1	消音垫	SILENT SHEET	
17	CSA5219001	1	扫线杆	THREAD WIPER ROD	
18	C110735001	1	垫圈	WASHER	
19	C048030342	1	挡圈 E3	RETAINING RING E3	
20	CS10470101	1	扫线	WIPER	
21	C060400516	1	螺钉 M4X5	SCREW BIND M4X5	
22	C146288001	1	挡线轴挡圈	THREAD WIPER STUD COLLAR	
23	CS03677001	1	垫圈	WASHER	
24	CSA5213001	1	停止开关组件	STOP SWITCH ASSY	
25	CS55485001	2	螺拴(带垫圈) M5X12	BOLT, SOCKET (S/P WASHER)M5X12	

L . 松线装置 / Tension release mechanism

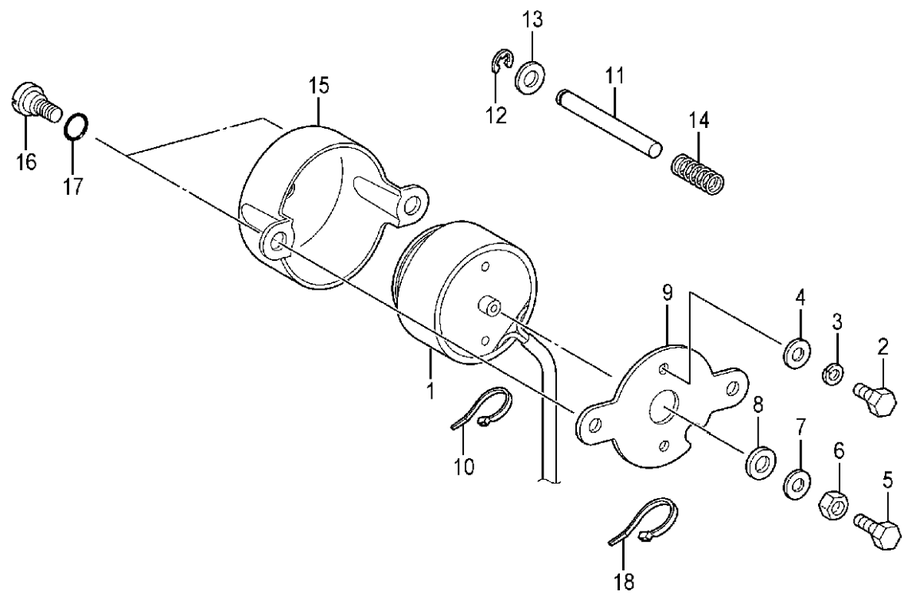

L. 松线装置 / Tension release mechanism

参照号	零部件序号	数量	零部件名称	NAME OF PARTS	RM
1	CSA4855001	1	松线电磁铁 HV	TENSION RELEASE SOLENOID HV	
2	C017400802	2	螺栓 M4X8	BOLT M4X8	
3	C028040246	2	弹簧垫圈 2-4	WASHER SPRING 2-4	
4	C025040236	2	平垫圈 M4	WASHER PLAIN M 4	
5	C017401415	1	螺栓 M4X14	BOLT M4X14	
6	C021400306	1	六角螺母 M4	NUT 3 M4	
7	C102707002	1	垫圈 4	WASHER	
8	C154599000	1	电磁铁缓冲垫圈	SOLENOID CUSHION	
9	CSA6389001	1	电磁铁安装板	SETTING PLATE SOLENOID	
10	CS04159000	1	线夹 1M	BAND, 1M	
11	CSA3347001	1	松线杆	TENSION RELEASE BAR	
12	C048040342	1	挡圈 E4	RETAINING RING E4	
13	C025050236	1	平垫圈 M5	WASHER PLAIN M 5	
14	CSA3348001	1	弹簧	SPRING,COMPRESSION	
15	CSA3349001	1	电磁铁盖	SOLENOID COVER	
16	CSA3306001	2	段螺钉 7-3	SHOULDER SCREW,7-3	
17	C081007070	2	O形圈 P7	O RING P7	
18	C218859001	1	电线夹 M150	BINDER, M150	

M1 . 控制箱装置 / Control box mechanism

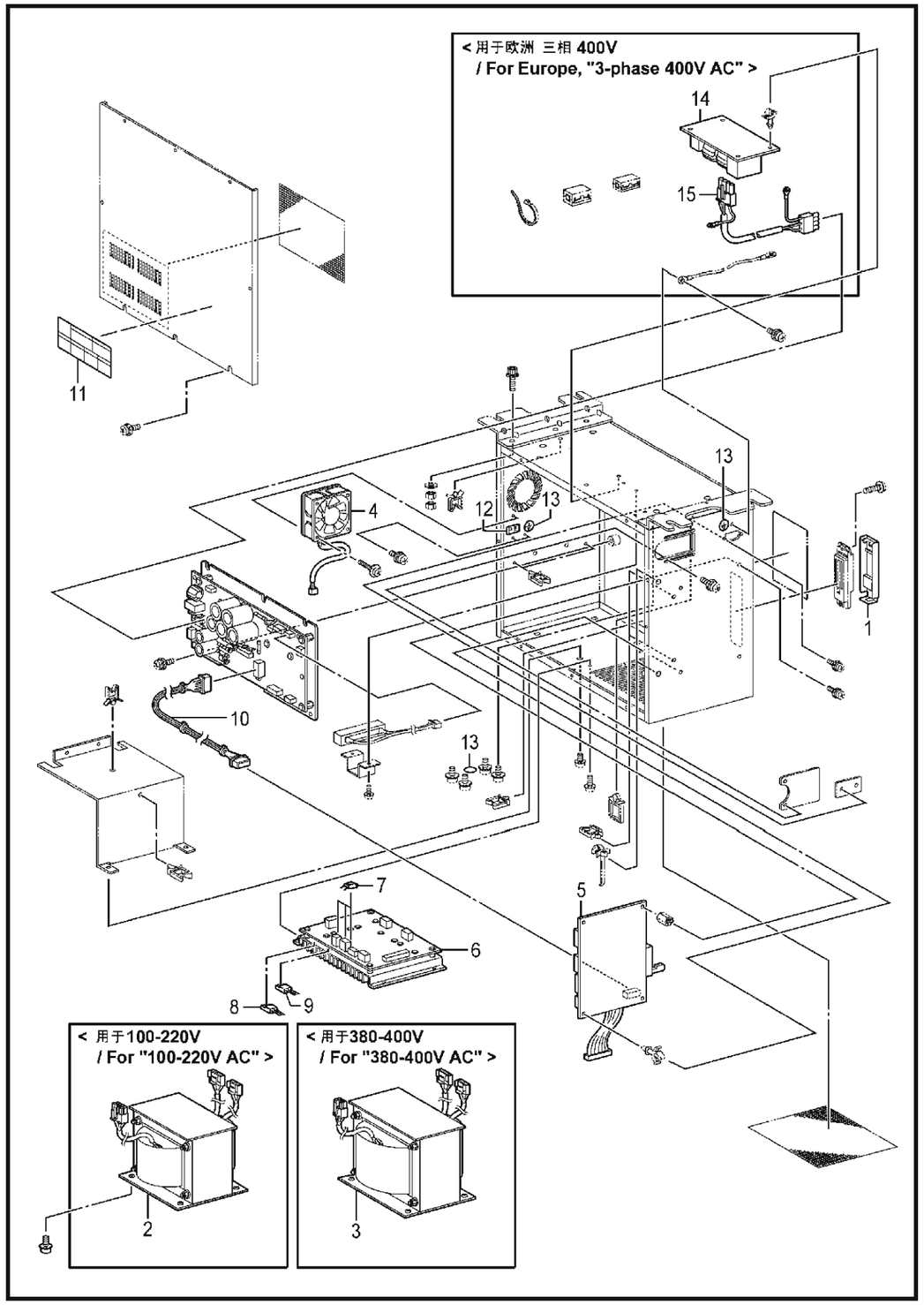

M1. 控制箱装置 / Control box mechanism

参照号	零部件序号	数量	零部件名称	NAME OF PARTS	RM
1	CSA6364001	1	盖组件 CF	CF CAP ASSY	
			<用于100-220V>	<For "100-220V AC">	
2	CSA3720001	1	变压器 LV	TRANSFORMER LOW VOLTAGE	
			<用于380-400V>	<For "380-400V AC">	
3	CSA3808001	1	变压器 HV	TRANSFORMER HIGH VOLTAGE	
4	CSA3797001	1	DC风扇马达组件	DC-FAN MOTOR ASSY	
5	CSA4556001	1	主基板组件	PCB ASSY,MAIN	
6	CSA3739301	1	基板组件 PMD	PCB ASSY,PMD	
7	CSA3744001	3	FET FS10ASJ-2	TRANSISTOR, FET:FS10ASJ-2	
8	CSA3722001	1	MOSFET FX20KMJ2	TRANSISTOR,FET:FX20KMJ-2	
9	CS49484000	1	MOSFETFS10KMJ-2	TRANSISTOR, FET:FS10KMJ-2	
10	CSA3806001	1	电线	HARNESS, MAIN POWER SUPPLY	
11	CJ04115001	1	感电标签(6国)	LABEL, ELEC. SHOCK 6 LANG	
12	C537060001	1	标记 PE	LABEL, PE	
13	CS37059001	3	PE标记	LABEL, GROUNDING	
			<用于欧洲 三相 400V>	<For Europe,"3-phase 400V AC">	
14	CSA3581001	1	基板组件	PCB ASSY,NF	
15	CSA3796001	1	电线 NF OUT	HARNESS,NF OUT	

M2 . 控制箱装置(电源基板)/ Control box (PCB) mechanism

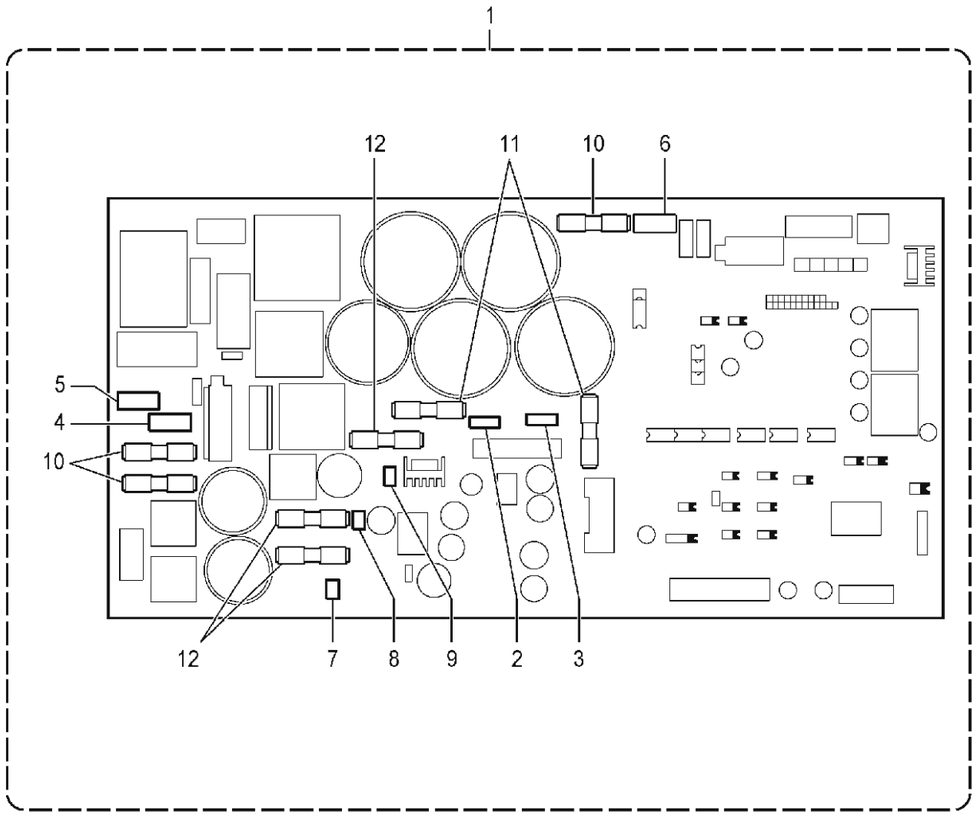

M2. 控制箱装置（电源基板） / Control box (PCB) mechanism

参照号	零部件序号	数量	零部件名称	NAME OF PARTS	RM
1	CSA3755201	1	电源马达基板组件	PCB ASSY,POWER SUPPLY MOTOR	
2	CSA3765001	1	电阻 V10D101	VARISTOR:V10D101	
3	CSA3766001	1	电阻 V10D241	VARISTOR:V10D241	
4	CSA3767001	1	电阻 V14D511	VARISTOR:V14D511	
5	CSA3762001	1	电阻 V14D911	VARISTOR:V14D911	
6	CSA3768001	1	电阻 V14D561	VARISTOR:V14D561	
7	CSA3769001	1	电阻 V5D121	VARISTOR:V5D121	
8	CSA3770001	1	电阻 V5D330	VARISTOR:V5D330	
9	CSA3771001	1	电阻 V5D820	VARISTOR:V5D820	
10	CSA3794001	3	保险丝 250V-15A	G FUSE S 15A	
11	CSA3795001	2	保险丝 250V-6A	G FUSE S 6A	
12	C616167001	3	保险丝 250V-3A	G FUSE S 3A	

N . 开关装置 / Power switch mechanism

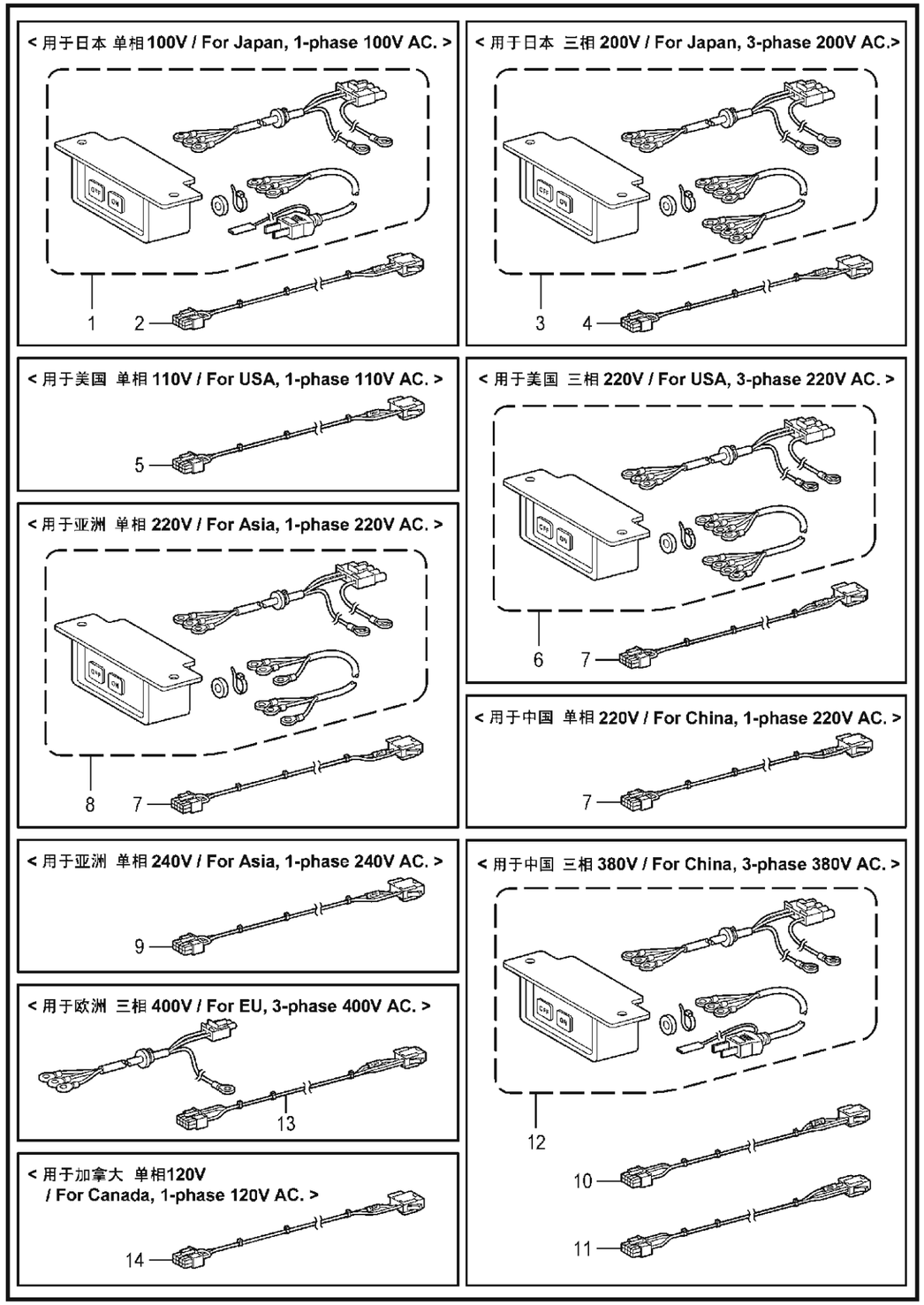

N. 开关装置 / Power switch mechanism

参照号	零部件序号	数量	零部件名称	NAME OF PARTS	RM
			<用于日本 单相 100V>	**<For Japan, 1-phase 100V AC.>**	
1	CSA3813001	1	电源开关组件 1P-JP	POWER SUPPLY SWITCH ASSY,1P-JP	
2	CSA3822001	1	V切换电线 100V	VOLTAGE SELECT HARNESS 100V	
			<用于日本 三相 200V>	**<For Japan,3-phase 200V AC.>**	
3	CSA3819001	1	电源开关组件 3P-JP	POWER SUPPLY SWITCH ASSY,3P-JP	
4	CSA3825001	1	V切换电线 200V	VOLTAGE SELECT HARNESS 200V	
			<用于美国 单相 110V>	**<For USA,1-phase 110V AC.>**	
5	CSA3823001	1	V切换电线 110V	VOLTAGE SELECT HARNESS 110V	
			<用于美国 三相 220V>	**<For USA,3-phase 220V AC.>**	
6	CSA3816001	1	电源开关组件 3P-L	POWER SUPPLY SWITCH ASSY,3P-L	
7	CSA3812001	1	V切换电线 220V	VOLTAGE SELECT HARNESS 220V	
			<用于亚洲 单相 220V>	**<For Asia, 1-phase 220V AC.>**	
8	CSA3809001	1	电源开关组件 1P	POWER SUPPLY SWITCH ASSY,1P	
7	CSA3812001	1	V切换电线 220V	VOLTAGE SELECT HARNESS 220V	
			<用于亚洲 单相 240V>	**<For Asia, 1-phase 240V AC.>**	
9	CSA3826001	1	V切换电线 240V	VOLTAGE SELECT HARNESS 240V	
			<用于中国 单相 220V>	**<For China,1-phase 220V AC.>**	
7	CSA3812001	1	V切换电线 220V	VOLTAGE SELECT HARNESS 220V	
			<用于中国 三相 380V>	**<For China,3-phase 380V AC.>**	
10	CSA3827001	1	V切换电线 380V	VOLTAGE SELECT HARNESS 380V	
11	CSA3789101	1	V切换电线 H220V	VOLTAGE SELECT HARNESS H220V	
12	CSA4510001	1	电源开关组件 3P-H	POWER SUPPLY SWITCH ASSY,3P-H	
			<用于欧洲 三相 400V>	**<For Europe,3-phase 400V AC.>**	
13	CSA3828001	1	V切换电线 400V	VOLTAGE SELECT HARNESS 400V	
			<用于加拿大 单相 120V>	**<For Canada, 1-phase 120V AC.>**	
14	CSA3824001	1	V切换电线 120V	VOLTAGE SELECT HARNESS 120V	

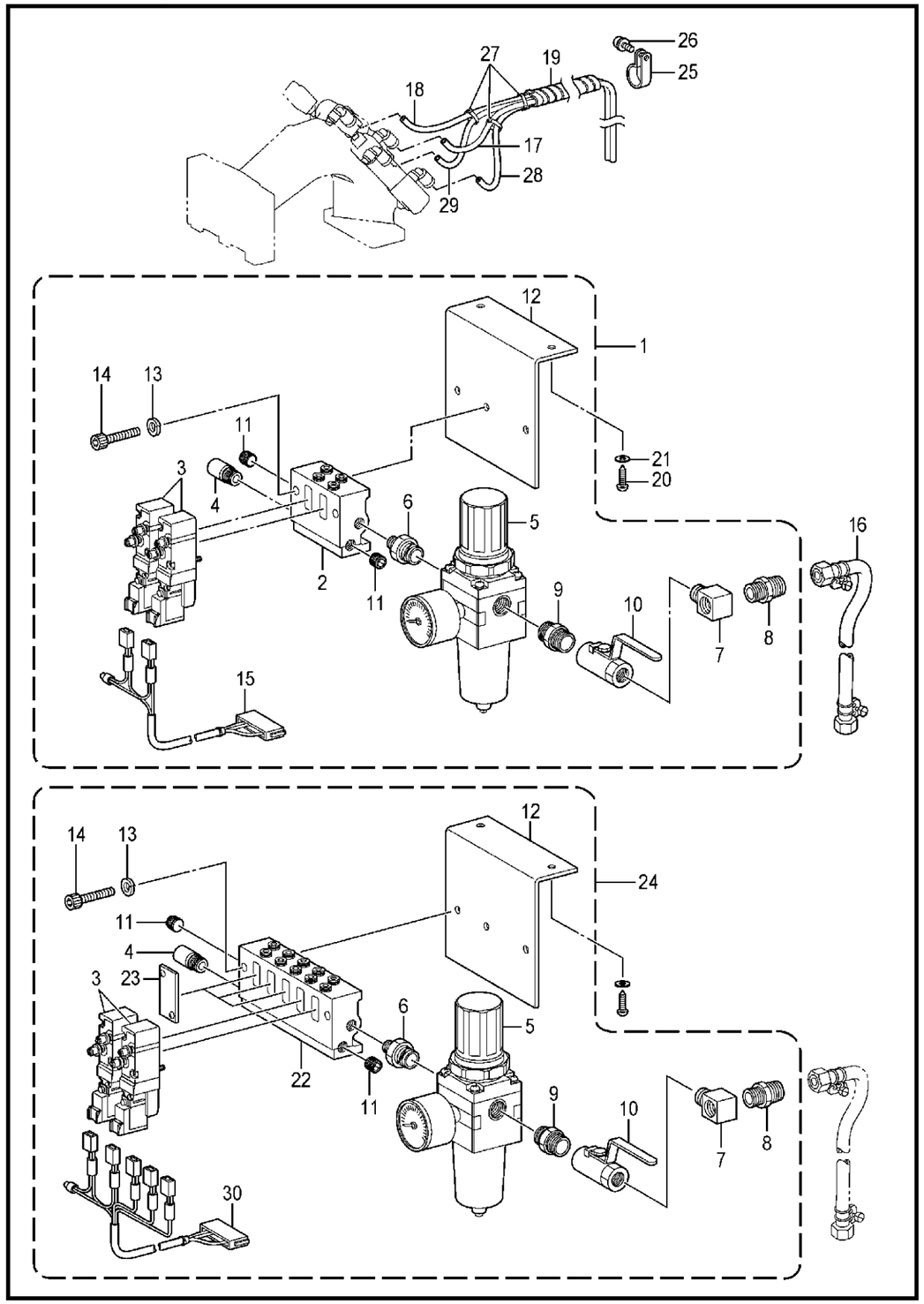

参照号	零部件序号	数量	零部件名称	NAME OF PARTS	RM
			<空压式>	**<For Peneumatic type>**	
1	CSA5281001	1	电磁阀组件 2A	SOLENOID VALVE ASSY 2A	
2	CSA5289001	1	集合管 2	MANIFOLD2	
3	CS39116100	2	阀 VQZ2151S-5	VALVE, VQZ2151S-5	
4	CSA5283001	1	消音器 AN103-1	SILENCER AN103-1	
5	CSA5282001	1	调整器 AW20-02G	FILTER REGULATOR AW20-02G	
6	CS09228000	1	管接头	NIPPLE 1/4X1/8	
7	C153252000	1	接头 PT	PT-JOINT	
8	CS04891000	1	中间接头 1/4	MIDDLE NIPPLE, 1/4	
9	CSA5285001	1	中间接头 1/4	MIDDLE NIPPLE, 1/4	
10	CSA6573001	1	球阀 Vo3 1/4	BALL VALVE Vo3 1/4	
11	C153274001	2	盖 1/8	CAP, 1/8	
12	CSA5286001	1	阀安装板	SETTING PLATE VALVE	
13	C028050246	2	弹簧垫圈 2-5	WASHER SPRING 2-5	
14	C018503036	2	螺栓 M5X30	BOLT SOCKET M5X30	
15	CSA5191001	1	阀门接线2连组件	VALVE HARNESS X2 ASSY	
16	C149796001	1	像皮管带接头	AIR HOSE, W/CONNECTOR	
17	CSA6405001	1	空气管 R	AIR TUBE, R	
18	CSA6406001	1	空气管 L	AIR TUBE, L	
28	CSA6405002	1	空气管 R	AIR TUBE, R	
29	CSA6406002	1	空气管 L	AIR TUBE, L	
19	CSA6407001	1	保护用弹性管 470S	SPIRAL, 470S	
20	C032422003	2	木螺钉 M4.1X20	WOOD SCREW, ROUND 2 M4.1X20	
21	C148847001	2	垫圈	WASHER, PLAIN 4.76	
25	C525664000	1	电线夹 #6	CORD HOLDER, #6	
26	C0A5401005	1	螺栓(带垫圈) M4X10DB	SCREW PAN (S/P WASHER) M4X10	
27	C228475000	3	电线夹 1.9X80	FASTENING BAND, 1.9X80	
24	CSA5288001	1	电磁阀组件 5A	SOLENOID VALVE ASSY 5A	
22	CSA5290001	1	集合管 5	MANIFOLD5	
23	CS53982000	3	隔板	BLANKING PLATE ASSY	
3	CS39116100	2	阀 VQZ2151S-5	VALVE, VQZ2151S-5	
4	CSA5283001	1	消音器 AN103-1	SILENCER AN103-1	
5	CSA5282001	1	调整器 AW20-02G	FILTER REGULATOR AW20-02G	
6	CS09228000	1	管接头	NIPPLE 1/4X1/8	
7	C153252000	1	接头 PT	PT-JOINT	
8	CS04891000	1	中间接头 1/4	MIDDLE NIPPLE, 1/4	
9	CSA5285001	1	中间接头 1/4	MIDDLE NIPPLE, 1/4	
10	CSA6573001	1	球阀 Vo3 1/4	BALL VALVE Vo3 1/4	
11	C153274001	2	盖 1/8	CAP, 1/8	
12	CSA5286001	1	阀安装板	SETTING PLATE VALVE	
13	C028050246	2	弹簧垫圈 2-5	WASHER SPRING 2-5	
14	C018503036	2	螺栓 M5X30	BOLT SOCKET M5X30	
30	CSA5192001	1	阀门接线5连组件	VALVE HARNESS X5 ASSY	

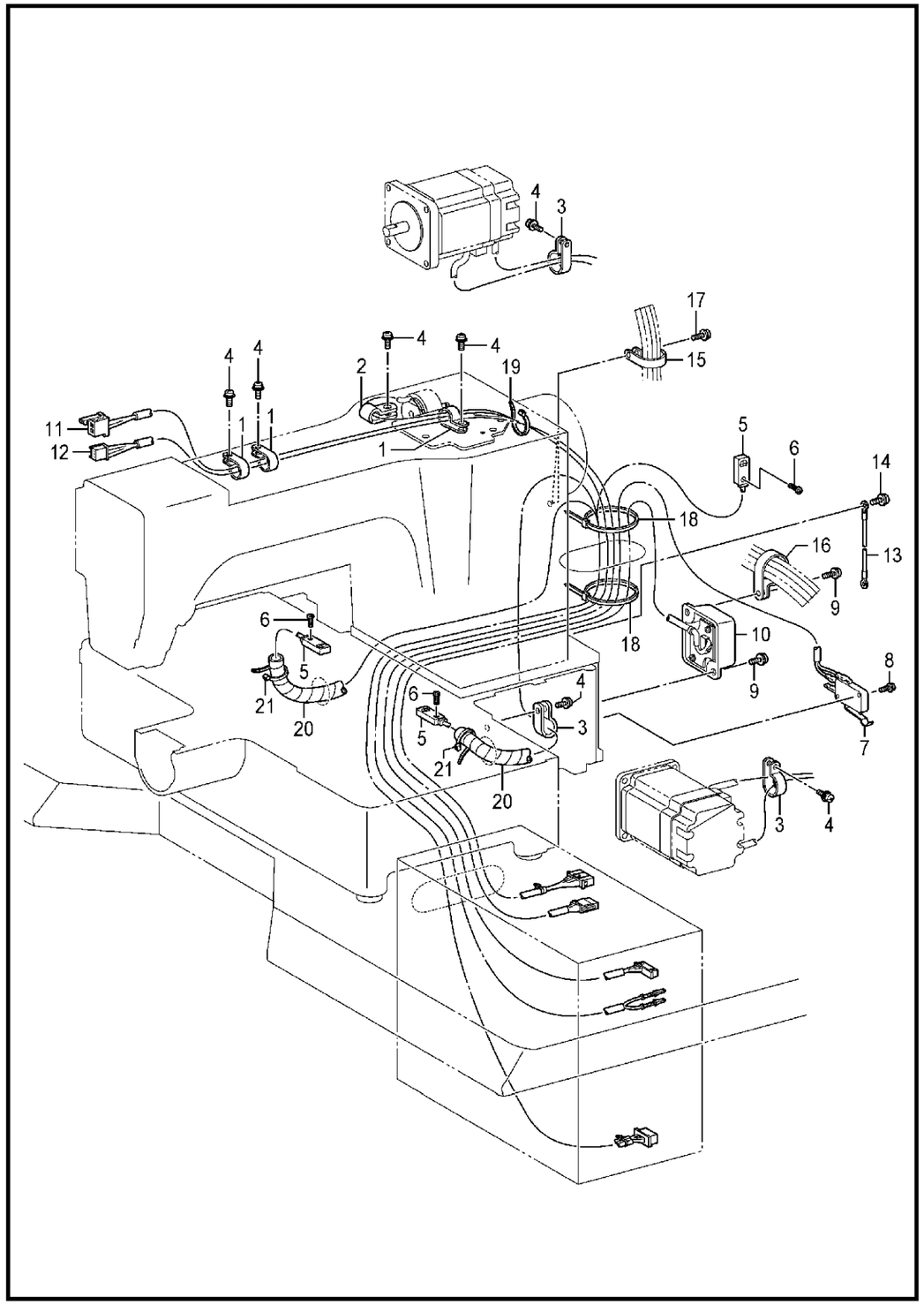

参照号	零部件序号	数量	零部件名称	NAME OF PARTS	RM
1	C525567000	3	电线夹 **#8**	CORD HOLDER, #8	
2	C149547000	1	压线板	CORD HOLDER, 4N	
3	C149287000	3	压线板	CORD HOLDER, 7N	
4	C0A5401006	7	螺栓(带垫圈) **M4X10DB**	SCREW PAN (S/P WASHER) M4X10	
5	CSA4830001	1	传感器组件	H-POSITION SENSOR ASSY	
6	C062300816	3	螺钉 **M3X8**	SCREW PAN M3X8	
7	CSA3481001	1	机头开关组件	SWITCH ASSY,MACHINE HEAD	
8	C0A5301605	2	螺栓(带垫圈) **M3X16DB**	SCREW PAN (S/P WASHER) M3X16	
9	C0A5401006	2	螺栓(带垫圈) **M4X10DB**	SCREW PAN (S/P WASHER) M4X10	
10	CSA4824001	1	头部检出复合件	HEAD DETECTOR UNIT ASSY	
11	CSA5210001	1	电磁铁接线	THREAD WIPER SOLENOID HARNESS	
12	CSA5214001	1	开关接线	STOP SWITCH HARNESS	
13	CSA5261001	1	接地线 **450**	GROUND WIRE 450	
14	C0A5401006	1	螺栓(带垫圈) **M4X10DB**	SCREW PAN (S/P WASHER) M4X10	
15	C554482000	1	电线夹 **#12**	CORD HOLDER, #12	
16	CS00470000	1	电线夹 **#16**	CORD HOLDER, 16N	
17	C0A5401006	2	螺栓(带垫圈) **M4X10DB**	SCREW PAN (S/P WASHER) M4X10	
18	C218859001	2	电线夹 **M150**	BINDER, M150	
19	CS04159000	1	线夹 **1M**	BAND, 1M	
20	CSA6560101	2	保护用螺线管 **140SS**	SPIRAL, 140SS	
21	CS04159000	2	线夹 **1M**	BAND, 1M	

R . 操作盘装置 / Operation panel mechanism

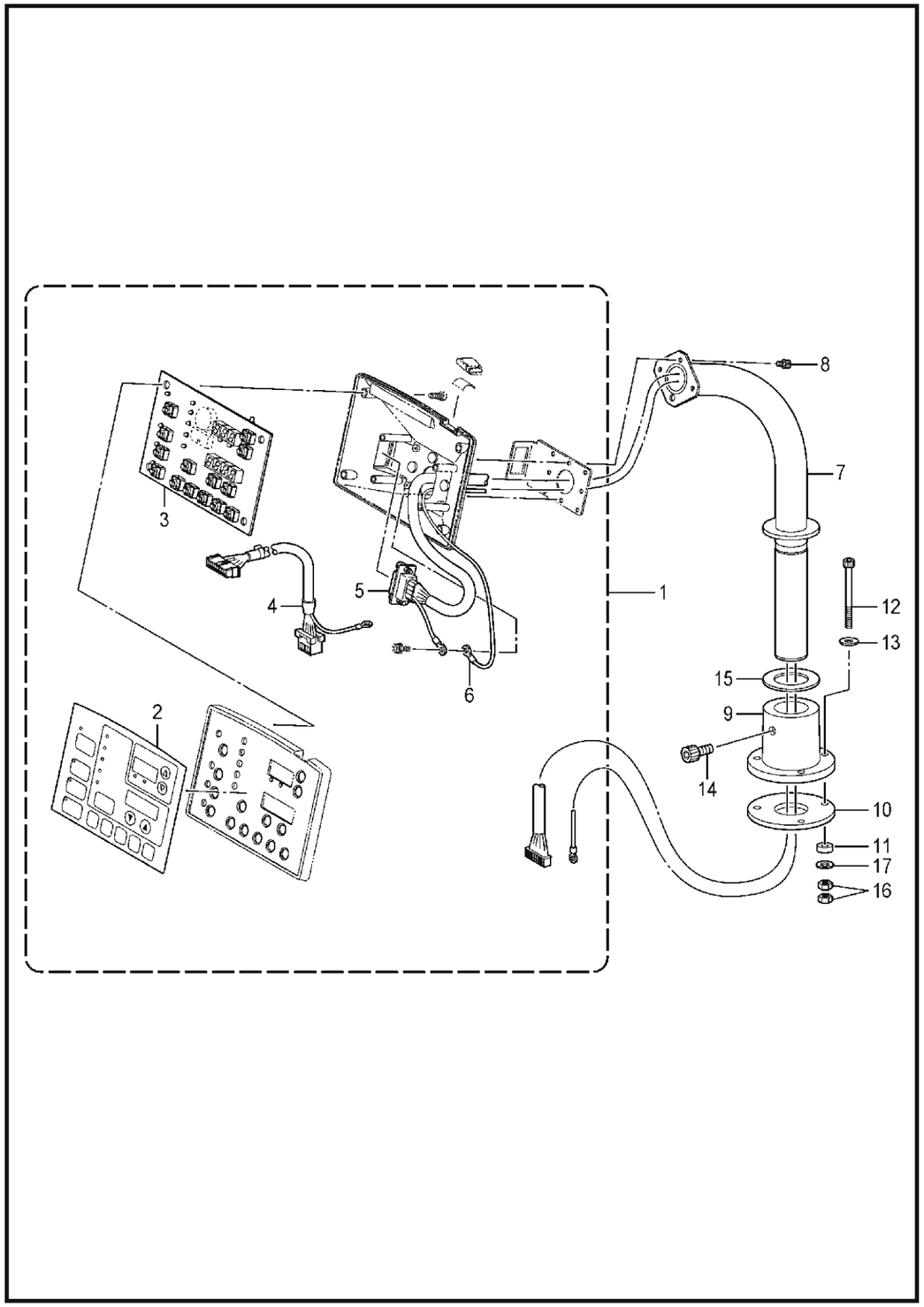

R. 操作盘装置 / Operation panel mechanism

参照号	零部件序号	数量	零部件名称	NAME OF PARTS	RM
1	CSA4834001	1	操作盘组件	OPERATION PANEL ASSY	
2	CSA3831001	1	操作盘面板	PANEL SHEET	
3	CSA3833101	1	操作盘基板组件	PANEL PCB ASSY	
4	CSA4563001	1	操作盘接线	PANEL HARNESS	
5	CSA4837001	1	程序器中继线	PROGRAMMER CONNECTING HARNESS	
6	CSA4841001	1	接地线	GROUND WIRE	
7	CSA4836001	1	操作盘支柱	OPERATION PANEL STAND	
8	C018400636	3	螺栓 M4X6	BOLT SOCKET M4X6	
9	CS43236009	1	操作盘基座	OPERATION PANEL BASE	
10	CS43674000	1	缓震垫 A	CUSHION, A	
11	CS43675000	3	缓震垫 B	CUSHION, B	
12	CS25634101	3	螺栓 M5X65	BOLT, SOCKET M5X65	
13	C025050236	3	平垫圈 M5	WASHER PLAIN M 5	
14	C018081636	1	螺栓 M8X16	BOLT SOCKET M8X16	
15	CS10408000	1	橡皮垫片	RUBBER SHEET	
16	C021500106	6	六角螺母 M5	NUT 1 M5	
17	C025050336	3	平垫圈 L5	WASHER PLAIN L 5	

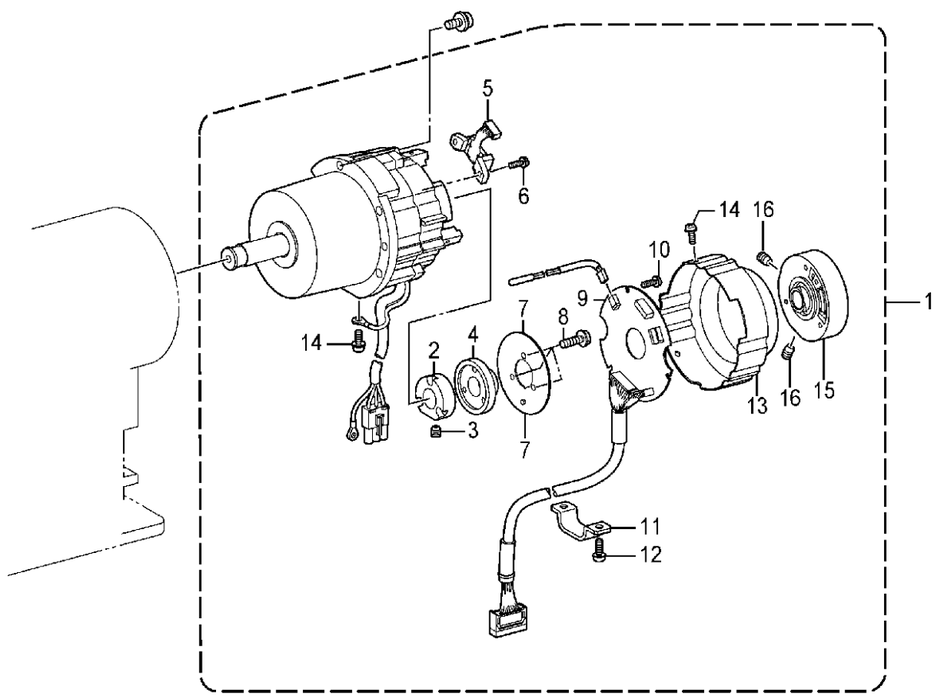

参照号	零部件序号	数量	零部件名称	NAME OF PARTS	RM
1	CJ80991001	1	马达组件 CDD-430D	MOTOR ASSY, CDD-430D	
2	CJ03955001	1	磁鼓 CDD	DRUM CDD	
3	C014400632	1	螺钉 M4X6	SET SCREW, SOCKET (CP) M4X6	
4	CJ03956001	1	磁铁 180P36	MAGNET 180P36	
5	CJ03957001	1	MR感应器组件 160P	MR SENSOR ASSY 180P	
6	C0A4300805	1	螺栓(带垫圈) M3X8DA	SCREW, PAN (S/P WASHER) M3X8	
7	CJ03958001	1	屏蔽板 CDD	SHIELD PLATE CDD	
8	C0A4261005	3	螺栓(带垫圈) M2.6X10DA	SCREW, PAN (S/P WASHE) M2.6X10	
9	CJ04488001	1	ENC 基板组件 430D#2	ENC PCB ASSY, 430D#2	
10	C0A5300606	3	螺栓(带垫圈) M3X6DB	SCREW, PAN (S/P WASHER) M3X6	
11	CJ04230001	1	电线固定夹 CDD-HT	CORD HOLDER, CDD-HT	
12	C0A4401005	3	螺栓(带垫圈) M4X10DA	SCREW, PAN (S/P WASHE) M4X10	
13	CJ04388001	1	编码器盖 430D	ENCODER COVER, 430D	
14	C0A4300805	3	螺栓(带垫圈) M3X8DA	SCREW, PAN (S/P WASHER) M3X8	
15	CJ04303001	1	同步轮组件 430D	PULLEY HOLDER ASSY, 430D	
16	C014500632	2	螺钉 M5X6	SET SCREW, SOCKET (CP) M5X6	

< 电磁式 / For solenoid type >

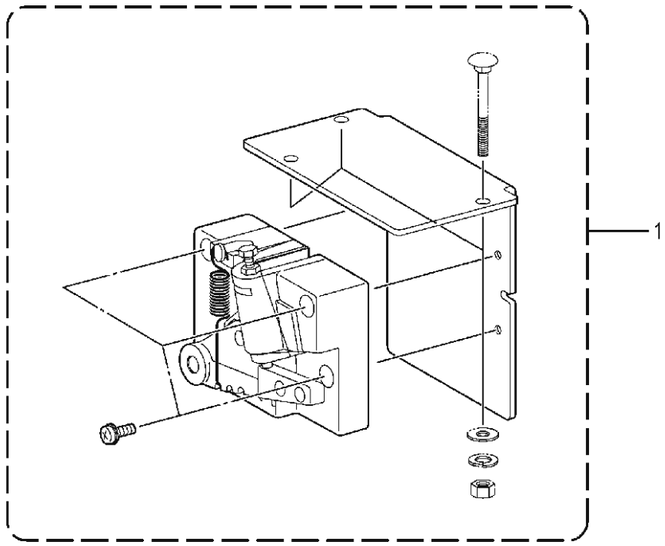

< 空压式 / For Pneumatic type >

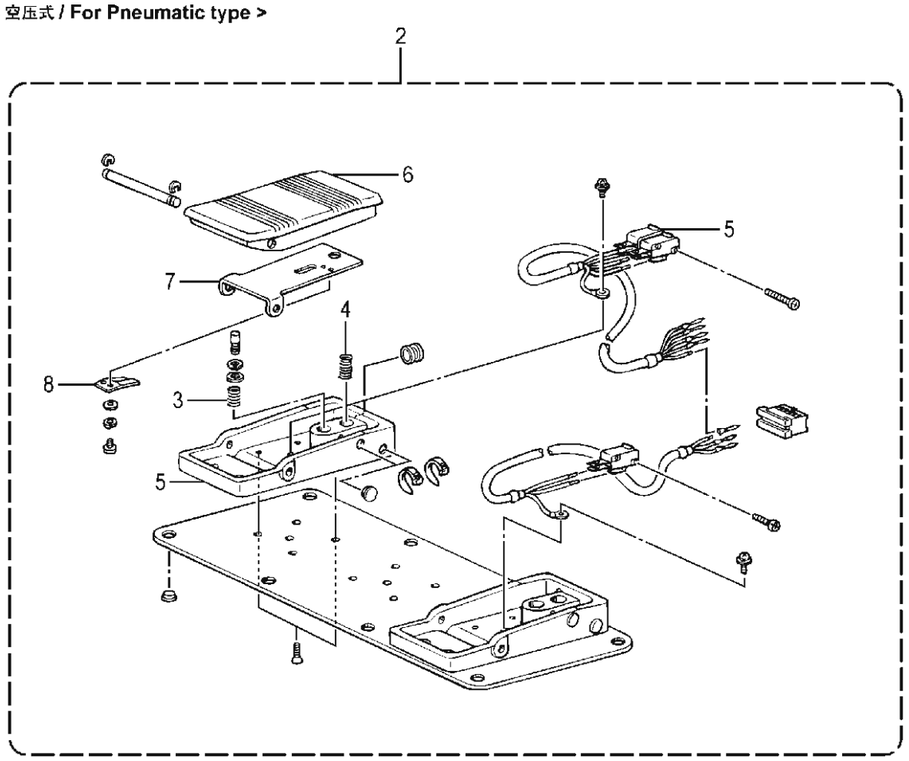

参照号	零部件序号	数量	零部件名称	NAME OF PARTS	RM
			<电磁式>	**<For Solenoid type>**	
1	CSA3519101	1	踏板复合件 A	TREADLE UINT,A ASSY	
			<空压式>	**<For Peneumatic type>**	
2	CSA6038001	1	2连脚踏开关组件	2-PEDAL FOOT SWITCH, SW ASSY	
3	CS38168001	1	弹簧	SPRING, COMPRESSION 10X30	
4	CS38170001	2	弹簧	FOOT PEDAL SPRING	
5	CS36260000	3	开关 VX	PIN BUTTON MICRO SWITCH, VX	
6	CS38174000	2	脚踏板	FOOT PEDAL	
7	CS38175001	2	脚踏护板	PROTECTION PLATE, PEDAL	
8	CS38176101	2	弹簧板	SPRING, PLATE	

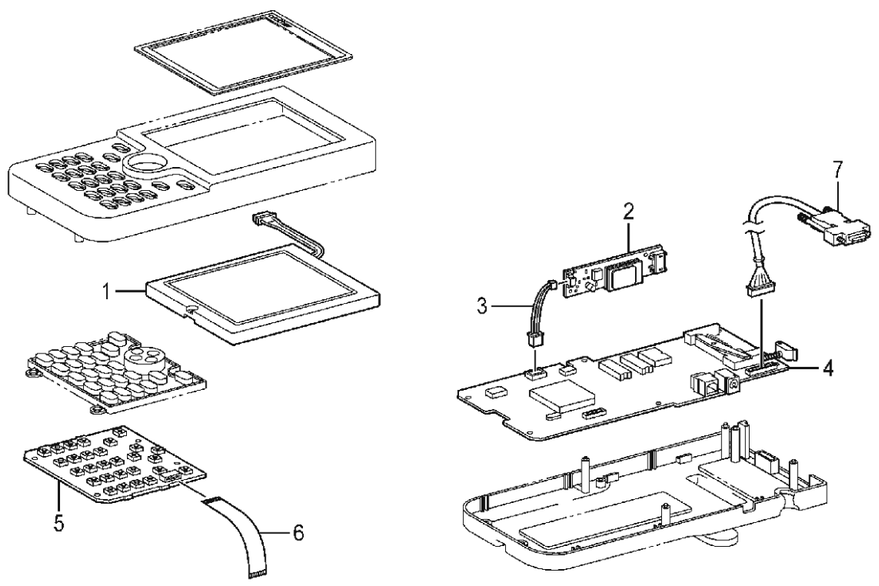

参照号	零部件序号	数量	零部件名称	NAME OF PARTS	RM
1	CSA5164001	1	LCD 模数	LCD MODULE	
2	CSA5165001	1	LCD 变换器	LCD INVERTER	
3	CSA5166001	1	变换器接线	INVERTER HARNESS	
4	CSA5170001	1	编程器基板组件	PROGRAMMER PCB ASSY	
5	CSA5172001	1	开关基板组件	SWITCH PCB ASSY	
6	CSA5168001	2	FFC 接线	FFC:SML2CD	
7	CSA5167001	1	编程器接线	PROGRAMMER HARNESS	

V1 . 附属装置(选购件) / Attachment set (Option parts)

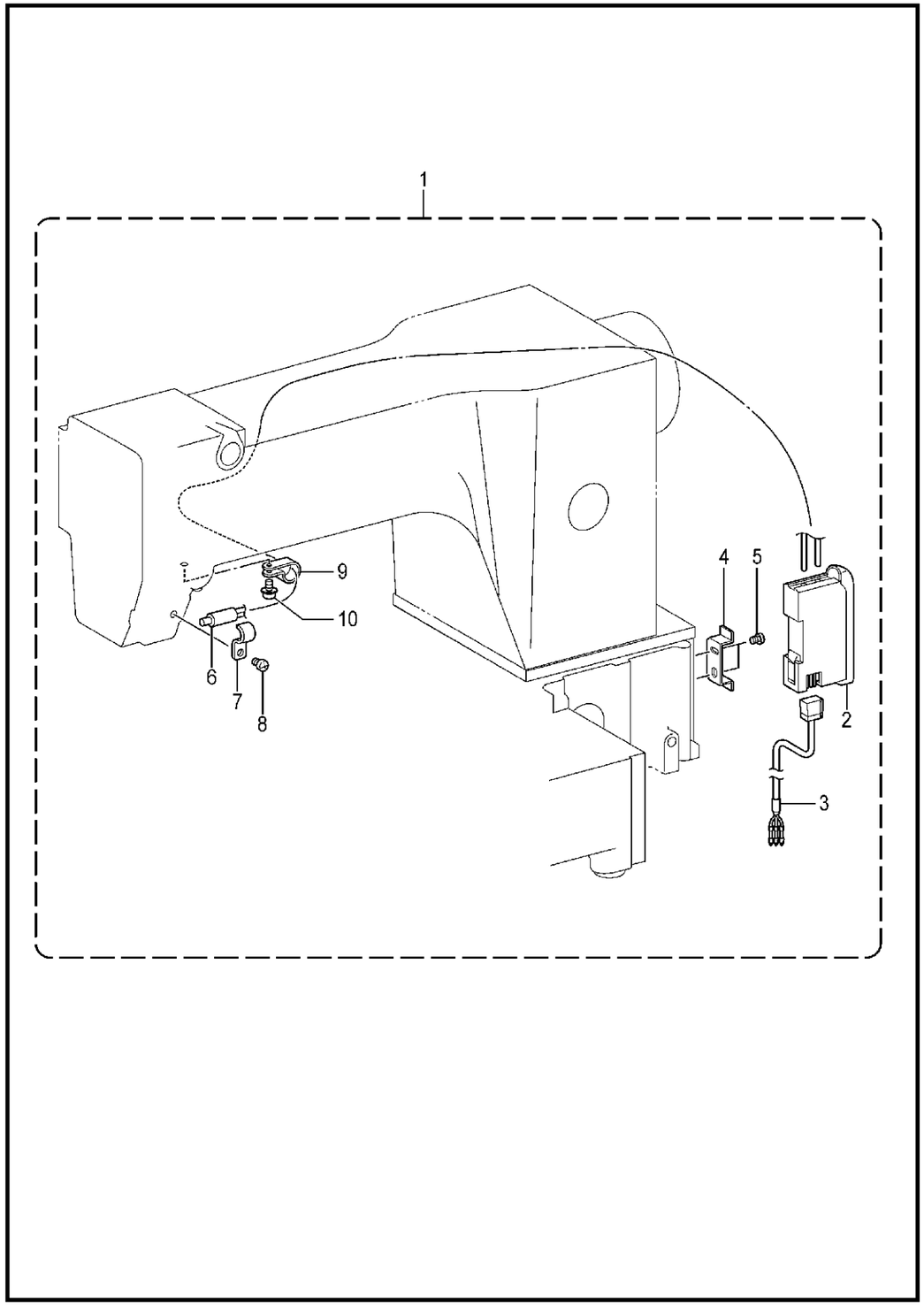

V1. 附属装置(选购件) / Attachment set (Option parts)

参照号	零部件序号	数量	零部件名称	NAME OF PARTS	RM
			<用于欧洲以外>	**<Except for Europe>**	
1	CSA5193001	1	断线传感装置组件 F	TR-BREAKAGE DETECTOR SET F	
2	CSA4816001	1	信号放大器 FX311	FIBER AMP FX311	
3	CSA4817001	1	电缆线组件	AMP CABLE ASSY	
4	CSA4818001	1	放大器安装支架	DIN METAL FITTING	
5	C062300616	2	螺钉 M3X6	SCREW PAN M3X6	
6	CSA4819001	1	光导纤维传感器 FDFM2	FIBER FDFM2	
7	CSA5194001	1	传感器安装板	SENSOR SETTING PLATE	
8	C062500616	1	螺钉 M5X6	SCREW PAN M5X6	
9	C625010000	1	尼龙夹 NK-2N	NYLON CLAMP NK-2N	
10	C0A5401006	1	螺栓(带垫圈) M4X10DB	SCREW PAN (S/P WASHER) M4X10	
			<用于欧洲>	**<For Europe only>**	
1	CSA51930E1	1	断线传感装置组件 F	TR-BREAKAGE DETECTOR SET F	
2	CSA48160E1	1	信号放大器 FX311	FIBER AMP FX311	
3	CSA4817001	1	电缆线组件	AMP CABLE ASSY	
4	CSA4818001	1	放大器安装支架	DIN METAL FITTING	
5	C062300616	2	螺钉 M3X6	SCREW PAN M3X6	
6	CSA4819001	1	光导纤维传感器 FDFM2	FIBER FDFM2	
7	CSA5194001	1	传感器安装板	SENSOR SETTING PLATE	
8	C062500616	1	螺钉 M5X6	SCREW PAN M5X6	
9	C625010000	1	尼龙夹 NK-2N	NYLON CLAMP NK-2N	
10	C0A5401006	1	螺栓(带垫圈) M4X10DB	SCREW PAN (S/P WASHER) M4X10	

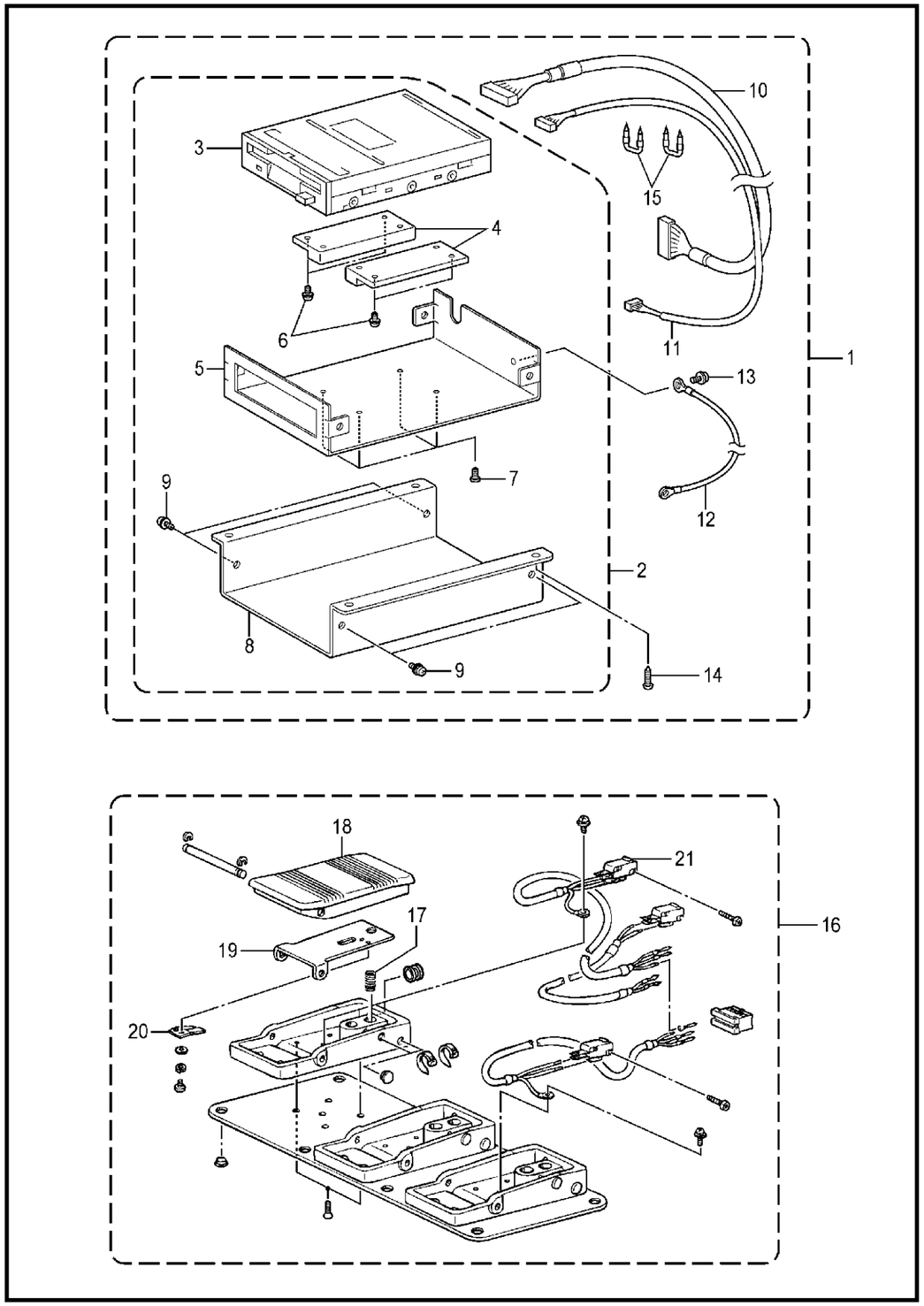

参照号	零部件序号	数量	零部件名称	NAME OF PARTS	RM
			<用于欧洲以外>	**<Except for Europe>**	
1	CSA5201001	1	FDD大组件	FDD SET	
2	CSA5202001	1	FDD复合件	FDD UNIT ASSY	
3	CSA6628001	1	FDD	FDD	
4	CS43225000	2	FDD隔离板	SPACER, FDD	
5	CSA5203001	1	FDD机座板	FDD BASE PLATE	
6	C0A4300605	4	螺栓(带垫圈) M3X6DA	SCREW PAN (S/P WASHER) M3X6	
7	C037300816	4	螺销 M3X8	TAPPING SCREW PAN V M3X8	
8	CSA5204001	1	FDD盖	FDD COVER	
9	C0A4300805	4	螺栓(带垫圈) M3X8DA	SCREW PAN (S/P WASHER) M3X8	
10	CSA5205001	1	FDD接线	FDD HARNESS	
11	CSA5206001	1	FDD电源线	FDD POWER HARNESS	
12	CSA5134001	1	接地线	GROUND WIRE	
13	C0A4300805	1	螺栓(带垫圈) M3X8DA	SCREW PAN (S/P WASHER) M3X8	
14	C032421302	4	木螺钉 M4.1X13	WOOD SCREW ROUND 2 M4.1X13	
15	C200190001	2	U形卡钉	STAPLE 10X20	
			<用于欧洲>	**<For Europe only>**	
1	CSA52010E1	1	FDD大组件	FDD SET	
2	CSA52020E1	1	FDD复合件	FDD UNIT ASSY	
3	CSA6628001	1	FDD	FDD	
4	CS43225000	2	FDD隔离板	SPACER, FDD	
5	CSA5203001	1	FDD机座板	FDD BASE PLATE	
6	C0A4300605	4	螺栓(带垫圈) M3X6DA	SCREW PAN (S/P WASHER) M3X6	
7	C037300816	4	螺销 M3X8	TAPPING SCREW PAN V M3X8	
8	CSA5204001	1	FDD盖	FDD COVER	
9	C0A4300805	4	螺栓(带垫圈) M3X8DA	SCREW PAN (S/P WASHER) M3X8	
10	CSA5205001	1	FDD接线	FDD HARNESS	
11	CSA5206001	1	FDD电源线	FDD POWER HARNESS	
12	CSA5134001	1	接地线	GROUND WIRE	
13	C0A4300805	1	螺栓(带垫圈) M3X8DA	SCREW PAN (S/P WASHER) M3X8	
14	C032421302	4	木螺钉 M4.1X13	WOOD SCREW ROUND 2 M4.1X13	
15	C200190001	2	U形卡钉	STAPLE 10X20	
			<用于欧洲以外>	**<Except for Europe>**	
16	CSA6495001	1	3连脚踏开关组件	3-PEDAL FOOT SW ASSY	
17	CS38170001	3	弹簧	FOOT PEDAL SPRING	
18	CS38174000	3	脚踏板	FOOT PEDAL	
19	CS38175101	3	脚踏护板	PROTECTION PLATE PEDAL	
20	CS38176101	3	弹簧板	SPRING, PLATE	
21	CS36260000	1	开关 VX	PIN BUTTON MICRO SWITCH, VX	
			<用于欧洲>	**<For Europe only>**	
16	CSA64950E1	1	3连脚踏开关组件	3-PEDAL FOOT SW ASSY	
17	CS38170001	3	弹簧	FOOT PEDAL SPRING	
18	CS38174000	3	脚踏板	FOOT PEDAL	
19	CS38175101	3	脚踏护板	PROTECTION PLATE PEDAL	
20	CS38176101	3	弹簧板	SPRING, PLATE	
21	CS36260000	1	开关 VX	PIN BUTTON MICRO SWITCH, VX	

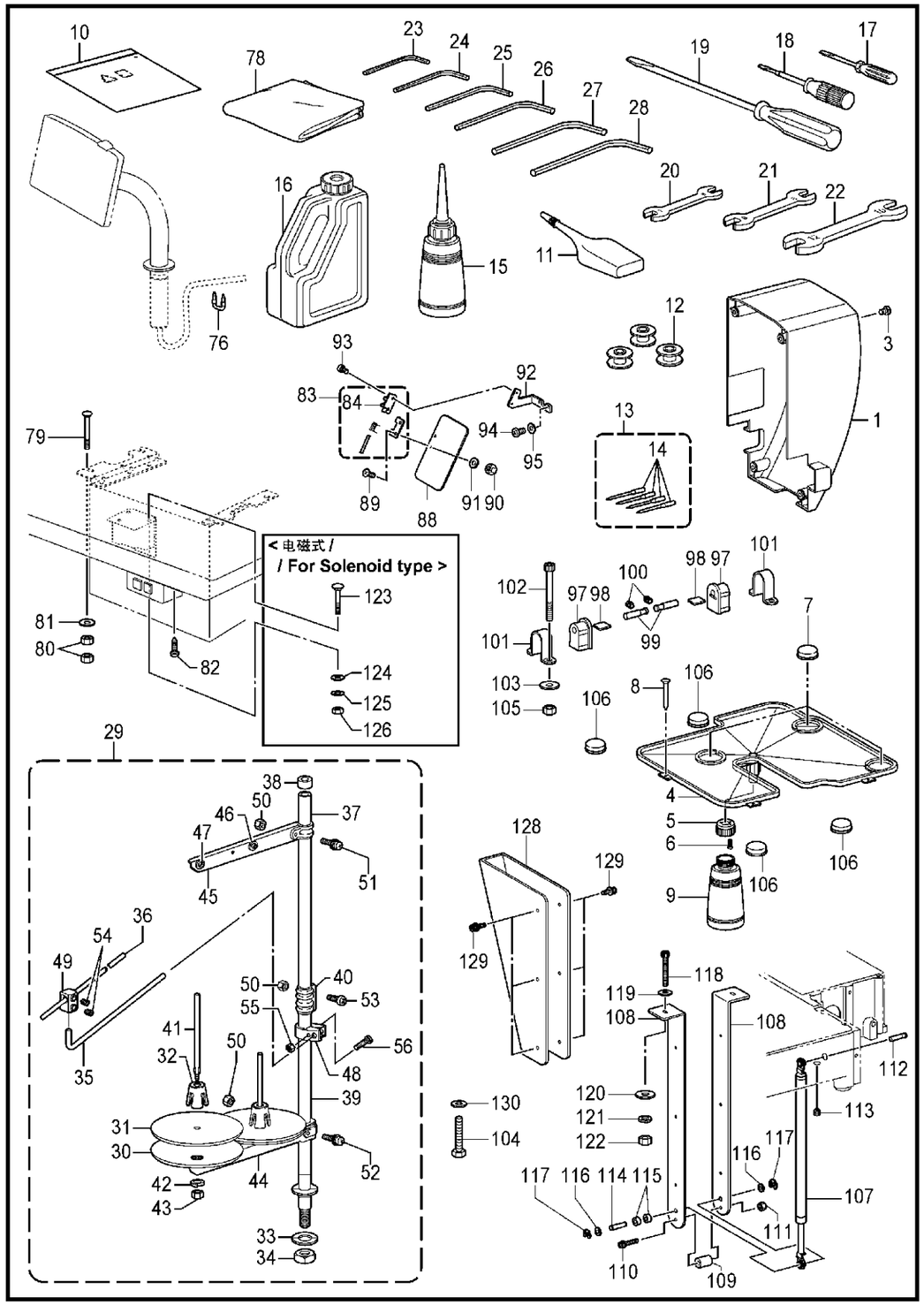

参照号	零部件序号	数量	零部件名称	NAME OF PARTS	RM
1	CSA4842001	1	马达盖	MOTOR COVER	
3	C 062061016	4	螺钉 M6X10	SCREW PAN M6X10	
4	CSA4844001	1	油盘	OIL PAN	
5	C 154467001	1	废油回收壶盖	DUST OILER	
6	C 037301215	2	螺销 M3X12	TAPPING SCREW PAN V M3X12	
7	CSA3540001	3	缓冲橡皮垫	RUBBER CUSHION	
8	C 109714000	7	钉	NAIL	
9	C 114486002	1	油壶	OILER	
10	C 122991001	1	附属品塑料袋	ACCESSORY BAG	
11	CS06706001	1	硅油	SILICONE OIL	
12	CS44633001	3	梭芯 LAN	BOBBIN, LAN	
13	C* P. 67	1	机针组件(4支装)	NEEDLE 4PIECE ASSY	
14	C* P. 67	4	机针	NEEDLE	
15	C 114483002	1	油壶组件	OILER ASSY	
16	CS55663001	1	油罐组件	OIL TANK ASSY	
17	C 142443001	1	小起子 1.9X52	SCREW-DRIVER, 1.9X52	
18	C 118837001	1	起子 3.4X70	SCREW-DRIVER, 3.4X70	
19	C 101572102	1	起子 5.5X190	SCREW-DRIVER, 5.5X190	
20	C 107779001	1	扳手 6X7	WRENCH, 6X7	
21	C 100887001	1	双头扳手 8X9	WRENCH, 8X9	
22	C 107780001	1	扳手 10X12	WRENCH, 10X12	
23	CS07783001	1	内六角扳手 1.5	HEXAGONAL WRENCH, 1.5	
24	C 142002001	1	内六角扳手 2	HEXAGONAL WRENCH, 2	
25	C 154125001	1	内六角扳手 2.5	HEXAGONAL WRENCH, 2.5	
26	C 142721001	1	内六角扳手 3	HEXAGONAL WRENCH, 3	
27	C 118064001	1	内六角扳手 4	HEXAGONAL WRENCH, 4	
28	C 150335001	1	内六角扳手 5	HEXAGONAL WRENCH, 5	
29	CS40574209	1	线架组件 2DTHF	COTTON STAND ASSY, 2DTHF	
30	CS51283001	2	垫圈	SPOOL STAND BASE	
31	C 150182000	2	线盘软垫	SPOOL MAT	
32	CS51282101	2	线轴缓冲架	SPOOL CUSHION	
33	C 150206002	1	平垫圈 16	WASHER, PLAIN 16	
34	CS38648001	1	螺母 U5/6-28	NUT, U5/8-28	
35	CS04109001	1	过线杆支杆	THREAD GUIDE SUPPORT BAR	
36	C 142997001	1	过线杆 3	THREAD GUIDE, 3	
37	C 150172003	1	线架支撑管	COLUMN PIPE	
38	C 150174000	1	线架支撑管套	COLUMN CAP	
39	C 156112003	1	线架撑管 D	COLUMN PIPE, D	
40	C 150173003	1	撑管夹	COLUMN JOINT	
41	C 150179002	2	线轴 B	SPOOL SHAFT, B	
42	C 028050246	2	弹簧垫圈 2-5	WASHER SPRING 2-5	
43	C 021500106	2	六角螺母 M5	NUT 1 M5	
44	CS02778002	1	插线架 2	SPOOL HOLDER, 2	
45	CS02787002	1	过线架 2	THREAD HANGER, 2	
46	C 150183000	2	过线管套	THREAD HANGER BASE	
47	C 142990001	2	过线架上过线管	THREAD BUSH	
48	C 150185009	1	过线杆夹头	THREAD GUIDE HOLDER	
49	C 138843001	1	连接器	JOINT	
50	C 021500106	4	六角螺母 M5	NUT 1 M5	
51	CS37038001	1	螺钉 M5X14	SCREW, PAN(S/P WASHER) M5X14	
52	CS37037001	1	螺钉 M5X32	SCREW, PAN (S/P WASHER) M5X32	
53	C 062501406	2	螺钉 M5X14	SCREW PAN M5X14	
54	C 014060632	2	固定螺钉 M6X6	SET SCREW SOCKET (CP) M6X6	
55	C 021500106	1	六角螺母 M5	NUT 1 M5	
56	CS37037001	1	螺钉 M5X32	SCREW, PAN (S/P WASHER) M5X32	

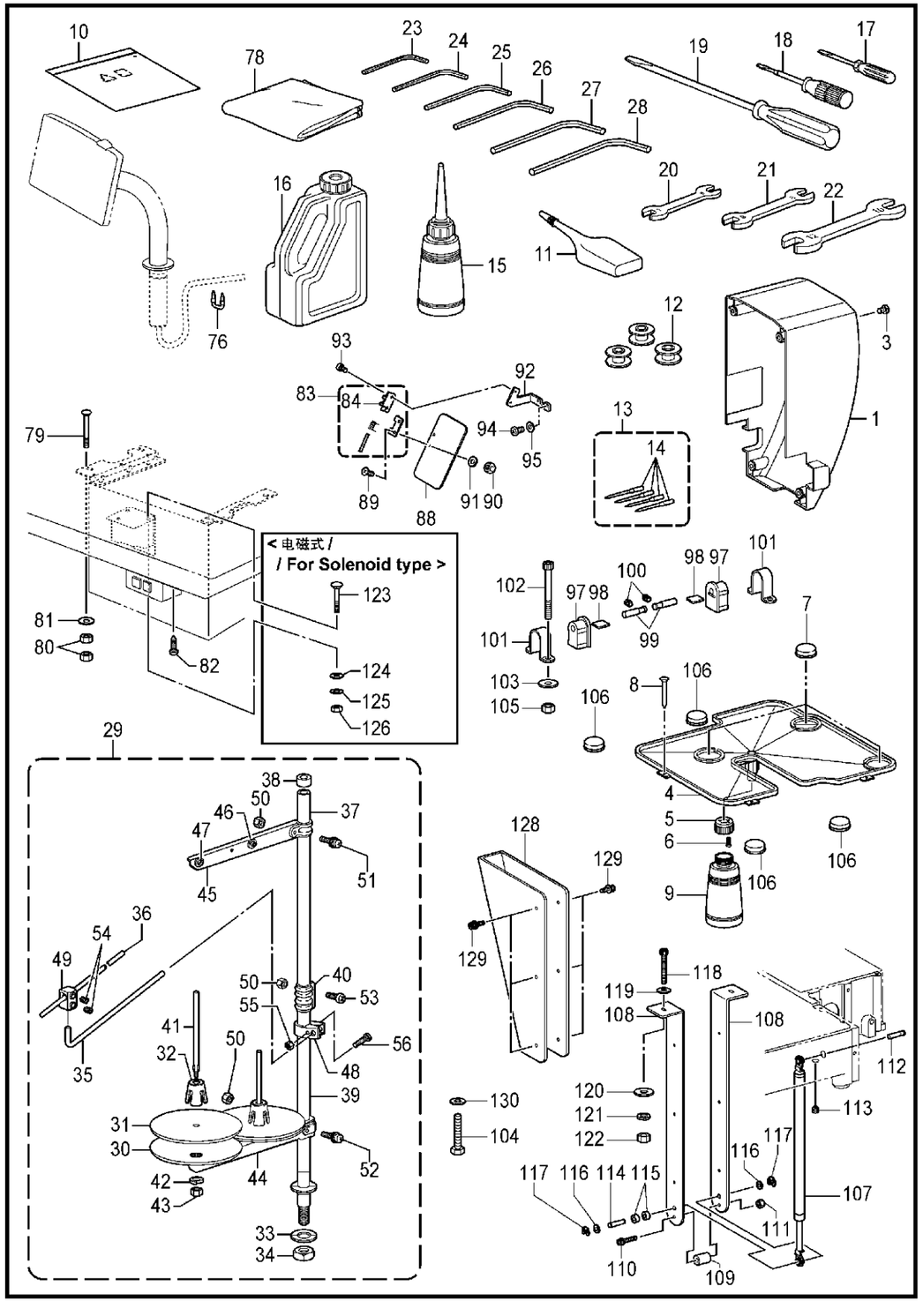

参照号	零部件序号	数量	零部件名称	NAME OF PARTS	RM
76	C200190001	7	U形卡钉	STAPLE,10X20	
78	C144226001	1	机头罩	HEAD COVER	
79	CS36007001	4	螺栓 M8X55	BOLT, M8X55	
80	C021080106	8	六角螺母 M8	NUT 1 M8	
81	C025080336	4	平垫圈 L8	WASHER PLAIN L 8	
82	C032461606	2	木螺钉 M4.5X16	WOOD SCREW ROUND 2 M4.5X16	
83	CS44483001	1	铰链组件	HINGE ASSY	
84	CS44484001	1	护眼板铰链	EYE GUARD HINGE	
88	CS44485001	1	护眼板	EYE GUARD	
89	C061300816	2	螺钉 M3X8	SCREW FLAT M3X8	
90	C021300106	2	螺母 M3	NUT 1 M3	
91	C026030236	2	垫圈 M3	WASHER PLAIN M 3	
92	CSA4104001	1	护眼板架 A	EYE GUARD HOLDER, A	
93	C062300506	2	螺钉 M3X5	SCREW PAN M3X5	
94	C062400616	2	螺钉 M4X6	SCREW PAN M4X6	
95	C026040136	2	平垫圈 S4	WASHER PLAIN S 4	
97	CSA3395001	2	橡皮铰链	RUBBER CUSHION	
98	CSA3392001	2	垫片	SPACER	
99	CSA3384001	2	机头支承销	PIN	
100	C012060636	2	螺钉 M6X6	SET SCREW SOCKET (FT) M6X6	
101	CSA3385001	2	头部铰链座	HINGE HOLDER	
102	C018065036	4	螺栓 M6X50	BOLT SOCKET M6X50	
103	C213650001	4	垫圈 2.3X8.5X38	WASHER, 2.3X8.5X38ST	
104	C017066002	1	螺栓 M6X60	BOLT M6X60	
105	C021060106	4	螺母 M6	NUT 1 M6	
106	CSA3540001	4	缓冲橡皮垫	RUBBER CUSHION	
107	CSA4845001	1	缓冲器	SHOCK ABSORBER GAS	
108	CSA4846001	2	缓冲器支架	HOLDER ABSORBER	
109	CSA5251001	1	垫圈	SPACER	
110	C018064031	1	螺栓 M6X40	BOLT SOCKET M6X40	
111	C021060106	1	螺母 M6	NUT 1 M6	
112	CSA4847001	1	轴 U	SHAFT U	
113	C012060636	1	螺钉 M6X6	SET SCREW SOCKET (FT) M6X6	
114	CS17974001	1	轴 D	SHAFT, D	
115	CS17975100	2	轴套 GS	SHAFT COLLAR, GAS	
116	C025080132	2	垫圈 S8	WASHER PLAIN S 8	
117	C048060342	2	挡圈 E6	RETAINING RING E6	
118	CSA3387001	2	螺栓 M6X75	BOLT SOCKET M6X75	
119	C025060236	2	平垫圈 M6	WASHER PLAIN M 6	
120	C213650001	2	垫圈 2.3X8.5X38	WASHER, 2.3X8.5X38ST	
121	C028060246	2	弹黄垫圈 2-6	WASHER SPRING 2-6	
122	C021060106	2	螺母 M6	NUT 1 M6	
			<电磁式>	<For Solenoid type>	
123	C119755001	3	螺栓 M6X60	BOLT, M6X60	
124	C025060236	3	平垫圈 M6	WASHER PLAIN M 6	
125	C028060246	3	弹黄垫圈 2-6	WASHER SPRING 2-6	
126	C021060106	3	螺母 M6	NUT 1 M6	
128	CSA6261001	1	支架盖	HOLDER ABSORBER COVER	
129	CS55479001	6	螺栓(带垫圈) M4X8	BOLT SOCKET (S/P WASHER) M4X8	
130	C025060236	1	平垫圈 M6	WASHER PLAIN M6	

Wa. 警告标签 / Warning labels

警告标签 / Warning labels	零部件名称 / Name of parts	尺寸 / Size(mm)	零部件序号 / Code
	感电标签(6国) Label, elec. shock 6 lang	50 X 118	CJ04115-001
	操作注意标签（日 / 英） Label, caution Jpn / Eng	52 X 84	CSA0792-001
	操作注意标签（中 / 英） Label, caution Chn / Eng	52 X 84	CSA0793-001
	警告标记 Mark, injury	L=25 R=1.2	CS36924-002
	接地标记 Label, grounding	ϕ12	CS37060-001
PE	PE标记 Label, PE	7.5 X 12.5	CS37059-001

Sp . 不同规格零部件一览表 / Different parts list

名称 Part name / 规格 Spec.	厚布料 Heavy-weight materials	中厚布料 Medium-weight materials
(J-66) 针孔板 Needle hole plate	★ (ϕ2.4) CSA3336-101	(ϕ2.2) CSA5221-001
(E-35) 梭芯套组件 Bobbin case assy	CS59221-201 < LC >	★ ☆
(E-36) 夹线簧 Tension spring	CS48664-001	★ ☆
(E-37) 螺钉 Screw	CS16492-101	★ ☆
(E-38) 防空转弹簧 Anti-spin spring	CS15667-001	★ ☆
(E-39) 梭芯 Bobbin	CS44633-001< LAN >	
(E-42) 中旋梭组件 Shuttle hook assy, w/box	★ ☆ CSA1890-201 < LG >	★ ☆ CSA2173-201 < LF >
(E-34) 外旋梭 Shuttle race base	★ ☆ C152686-201 < B >	★ ☆ C152682-201 < A >
(G-30) 挑线弹簧 Spring,tension	★ ☆ C107606-101	★ ☆ C104525-101
(G-9) 调节弹簧 Thread take-up spring	C144588-201	★ ☆ C145519-201

Sp . 不同规格零部件一览表 / Different parts list

名称 Part name / 规格 Spec.	厚布料 Heavy-weight materials	中厚布料 Medium-weight materials
(G-28) 弹簧 Spring,tension	CSA4146-101 ★	
(G-20) 针杆线导向 Needle bar thread guide	CSA3257-101 < A > ★	
(Z-13) 机针组件(4支装) Needle assy	CSA1645-019 ★ ☆	CSA1752-016 ★ ☆
(B-32, Z-14) 机针 Needle	DP×17 < #19 > C145646-019 ★ ☆	DP×5 < #16 > C107415-016 ★ ☆
(D-57) 压脚 Presser foot	CSA4811-001 < H >	CS42843-001 < A >

Ga . 工模具一览表 / Gauge parts list

压脚 / Presser foot

A / CS42843-001 *	B / CS42844-001	C / CS42845-001	D / CS42846-001
5, φ4, φ2.5	5, φ5.5, φ4	5, φ3, φ2	φ10, φ6, φ3
E / CS42847-001	**F / C157237-001**	**G / C158592-001**	**J / CS42848-001**
5, φ2.5, φ1.6	F, φ2	G, 2.5, φ3, φ2	10, φ4, φ2.5
CA-UT / CS40214-001	**B-L /CS49448-001**	**XA / CS42849-101**	**H / CSA4811-001 ***
5, φ4, φ2.5	B, 7, φ5.5, φ4	5, φ4, φ2.5	5, φ5.5, φ3

针孔板 / Needle hole plate

2.4 C0.4 / CSA3336-001 *	2.2 /CSA5221-001 *	3.0 C1.5 /CSA5222-001 *
φ4, φ2.4, 2.9	φ2.2, 3.0	φ6, φ3, 2.9

印有*记号的为标准零部件
The * symbol is for Standard parts.

CODE	REF.NO	Page
C004300513	A - 16	2
C012060536	B - 52	4
	C2 - 54	8
	C2 - 59	8
	C3 - 14	12
	C3 - 32	12
	C4 - 19	14
	D1 - 55	16
	E - 6	22
C012060636	B - 24	4
	B - 48	4
	C1 - 19	6
	C1 - 29	6
	C2 - 3	8
	C2 - 6	8
	C2 - 10	8
	C2 - 16	8
	C3 - 10	12
	C3 - 19	12
	C3 - 28	12
	C4 - 3	14
	C4 - 15	14
	D1 - 14	16
	D1 - 24	16
	D1 - 30	16
	D1 - 36	16
	D2 - 10	18
	D2 - 13	18
	D2 - 25	18
	D2 - 33	18
	D2 - 37	18
	D2 - 41	18
	D2 - 57	18
	D3 - 8	20
	D3 - 16	20
	D3 - 20	20
	D3 - 34	20
	D3 - 35	20
	E - 9	22
	E - 13	22
	E - 30	22
	G - 23	28
	J - 45	32
	J - 54	32
	Z - 100	64
	Z - 113	64
C012400436	D1 - 25	16
	D1 - 31	16
	H - 17	30
	H - 24	30
	J - 9	32
C012500536	B - 21	4
	B - 36	4
	B - 43	4
	D2 - 46	18
	D2 - 51	18
	D3 - 25	20
	E - 11	22
	E - 41	22
	H - 3	30
	H - 36	30
C012501031	C3 - 46	12
	C4 - 29	14

CODE	REF.NO	Page
C012501031	C4 - 34	14
C014060632	Z - 54	62
C014400632	S - 3	52
C014500632	S - 16	52
C016061031	D2 - 32	18
	D2 - 36	18
	D3 - 15	20
C017061216	D1 - 12	16
C017065002	D1 - 45	16
C017066002	Z - 104	64
C017400802	J - 5	32
	L - 2	38
C017401415	L - 5	38
C017501616	C3 - 51	12
	C4 - 40	14
C018061236	D2 - 59	18
	D3 - 29	20
C018062036	C2 - 1	8
C018064031	Z - 110	64
C018065036	Z - 102	64
C018081636	R - 14	50
C018300636	C1 - 5	6
C018301436	C1 - 3	6
C018400636	D2 - 39	18
	D3 - 18	20
	F - 10	24
	R - 8	50
C018400836	C1 - 10	6
	C1 - 13	6
	C2 - 21	8
	D1 - 48	16
	K - 9	36
C018401036	C2 - 52	8
	C2 - 57	8
	C2 - 68	10
	D2 - 2	18
	D2 - 23	18
	D3 - 6	20
C018401636	B - 27	4
C018402036	C1 - 31	6
	C1 - 35	6
	C2 - 23	8
C018500836	C3 - 34	12
C018501036	C2 - 66	10
	D2 - 20	18
	D3 - 3	20
C018501232	E - 33	22
C018501236	J - 48	32
C018501636	B - 3	4
	B - 49	4
	C1 - 23	6
C018503036	P - 14	46
C021060106	D1 - 10	16
	D1 - 46	16
	J - 23	32
	J - 34	32
	J - 39	32
	Z - 105	64
	Z - 111	64
	Z - 122	64
	Z - 126	64
C021060306	D1 - 41	16
	J - 25	32

CODE	REF.NO	Page
C021060306	J - 32	32
	J - 41	32
C021080106	Z - 80	64
C021300103	A - 19	2
C021300106	Z - 90	64
C021400216	C2 - 37	8
C021400306	L - 6	38
C021500106	R - 16	50
	Z - 43	62
	Z - 50	62
	Z - 55	62
C021500216	C3 - 23	12
	C3 - 47	12
	C4 - 30	14
	C4 - 35	14
C025030236	J - 65	34
	J - 72	34
C025040236	C1 - 36	6
	D2 - 30	18
	D3 - 13	20
	J - 7	32
	K - 10	36
	L - 4	38
C025050236	C1 - 24	6
	C3 - 35	12
	C3 - 52	12
	C4 - 41	14
	L - 13	38
	R - 13	50
C025050336	R - 17	50
C025060236	Z - 119	64
	Z - 124	64
	Z - 130	64
C025080132	Z - 116	64
C025080336	Z - 81	64
C025100132	C1 - 16	6
C025350332	A - 35	2
C026030136	E - 21	22
C026030236	Z - 91	64
C026040136	Z - 95	64
C028030246	J - 71	34
C028040246	C1 - 37	6
	F - 66	26
	J - 6	32
	L - 3	38
C028050246	C3 - 36	12
	C3 - 53	12
	C4 - 42	14
	J - 49	32
	P - 13	46
	Z - 42	62
C028060246	Z - 121	64
	Z - 125	64
C032421302	V2 - 14	60
C032422003	P - 20	46
C032461606	Z - 82	64
C037300816	V2 - 7	60
C037301215	Z - 6	62
C047401242	B - 41	4
C048030342	K - 19	36
C048040142	C3 - 6	12
C048040342	J - 20	32
	K - 12	36

CODE	REF.NO	Page
C048040342	L - 12	38
C048050142	C4 - 6	14
C048050342	H - 10	30
	H - 19	30
C048060142	C4 - 9	14
C048060342	Z - 117	64
C048070342	E - 31	22
C048080142	C3 - 11	12
	C3 - 29	12
	C4 - 16	14
	D1 - 29	16
	J - 44	32
C048080342	C2 - 8	8
	D2 - 12	18
C048100142	C1 - 17	6
	C3 - 3	12
	D2 - 28	18
	D3 - 11	20
C048420242	C1 - 21	6
C060400516	K - 21	36
C061300616	C1 - 6	6
	C1 - 8	6
	C1 - 34	6
C061300816	Z - 89	64
C062060816	F - 33	24
C062061016	A - 7	2
	A - 9	2
	A - 13	2
	F - 3	24
	H - 37	30
	Z - 3	62
C062300416	C2 - 48	8
	D1 - 20	16
	J - 64	34
	J - 73	34
C062300506	A - 38	2
	Z - 93	64
C062300616	E - 22	22
	K - 7	36
	V1 - 5	58
C062300816	Q - 6	48
C062350616	H - 8	30
C062400416	C2 - 28	8
	C2 - 49	8
	D2 - 5	18
C062400616	D1 - 6	16
	D2 - 29	18
	D2 - 54	18
	D2 - 56	18
	D3 - 12	20
	D3 - 27	20
	F - 5	24
	F - 12	24
	F - 35	24
	F - 65	26
	Z - 94	64
C062400816	B - 22	4
	B - 34	4
C062401006	A - 24	2
	B - 46	4
	B - 51	4
	C2 - 27	8
	F - 45	24

CODE	REF.NO	Page
C062401216	H - 13	30
C062500616	G - 2	28
	G - 4	28
	G - 6	28
	H - 30	30
	V1 - 8	58
C062501406	Z - 53	62
C062670412	G - 26	28
C070696800	D2 - 44	18
	D2 - 49	18
	D3 - 23	20
C076000600	C1 - 15	6
C076806606	C1 - 20	6
C081003670	E - 15	22
C081007070	L - 17	38
C0A4261005	S - 8	52
C0A4300605	V2 - 6	60
C0A4300805	S - 6	52
	S - 14	52
	V2 - 9	60
	V2 - 13	60
C0A4401005	S - 12	52
C0A5300606	S - 10	52
C0A5301605	Q - 8	48
C0A5401005	P - 26	46
C0A5401006	C2 - 33	8
	F - 40	24
	F - 42	24
	Q - 4	48
	Q - 9	48
	Q - 14	48
	Q - 17	48
	V1 - 10	58
C100136001	G - 27	28
C100360003	J - 67	34
C100401022	H - 33	30
C100402004	G - 14	28
C100887001	Z - 21	62
C101572102	Z - 19	62
C102630001	D2 - 8	18
C102707002	L - 7	38
C104449001	A - 11	2
C104525101	Sp	66
C104567101	F - 18	24
C104821001	A - 5	2
	D3 - 31	20
C107415016	Sp	67
C107606101	Sp	66
C107779001	Z - 20	62
C107780001	Z - 22	62
C109714000	Z - 8	62
C109763001	D2 - 45	18
	D2 - 50	18
	D3 - 24	20
C110367001	B - 18	4
	C3 - 12	12
	C3 - 30	12
	C4 - 17	14
C110735001	K - 18	36
C111466101	D1 - 56	16
C114483002	Z - 15	62
C114486002	Z - 9	62
C117608001	A - 2	2

CODE	REF.NO	Page
C117934001	A - 4	2
C118064001	Z - 27	62
C118208001	D2 - 14	18
C118550001	D3 - 32	20
C118735001	C2 - 63	10
C118837001	Z - 18	62
C119755001	Z - 123	64
C120265002	A - 27	2
C120448001	H - 23	30
C122991001	Z - 10	62
C138843001	Z - 49	62
C141362001	D1 - 34	16
C142002001	Z - 24	62
C142211001	B - 25	4
C142274101	F - 47	24
C142443001	Z - 17	62
C142721001	Z - 26	62
C142990001	Z - 47	62
C142997001	Z - 36	62
C144226001	Z - 78	64
C144458001	B - 29	4
C144588201	Sp	66
C145446001	G - 13	28
	G - 18	28
C145446002	H - 32	30
C145465001	B - 23	4
C145519201	Sp	66
C145547001	F - 34	24
C145646019	Sp	67
C146288001	K - 22	36
C146354002	J - 50	32
C148847001	P - 21	46
C149097000	K - 16	36
C149287000	Q - 3	48
C149547000	F - 38	24
	Q - 2	48
C149796001	P - 16	46
C150172003	Z - 37	62
C150173003	Z - 40	62
C150174000	Z - 38	62
C150179002	Z - 41	62
C150182000	Z - 31	62
C150183000	Z - 46	62
C150185009	Z - 48	62
C150206002	Z - 33	62
C150335001	Z - 28	62
C151439102	D1 - 59	16
C152682201	Sp	66
C152684101	E - 20	22
C152686201	Sp	66
C152744001	D2 - 7	18
C152881001	G - 22	28
C152883000	G - 24	28
C152884001	G - 25	28
C152936001	H - 6	30
C152937001	H - 7	30
C152948001	F - 20	24
C153049001	G - 7	28
C153050000	E - 23	22
C153252000	P - 7	46
C153274001	P - 11	46
C154125001	Z - 25	62
C154467001	Z - 5	62

CODE	REF.NO	Page
C154596000	J - 30	32
C154599000	J - 10	32
	L - 8	38
C156112003	Z - 39	62
C157237001	Ga	68
C158592001	Ga	68
C159163000	D3 - 30	20
C159224001	G - 19	28
C159486001	H - 9	30
	H - 25	30
C159805001	G - 12	28
C200190001	V2 - 15	60
	Z - 76	64
C213650001	Z - 103	64
	Z - 120	64
C218859001	L - 18	38
	Q - 18	48
C228475000	P - 27	46
C231071001	J - 27	32
C525567000	F - 39	24
	F - 55	24
	Q - 1	48
C525664000	F - 41	24
	P - 25	46
C537060001	M1 - 12	40
C552907000	F - 61	26
C554482000	Q - 15	48
C616167001	M2 - 12	42
C623033000	D1 - 4	16
C625010000	V1 - 9	58
CJ03955001	S - 2	52
CJ03956001	S - 4	52
CJ03957001	S - 5	52
CJ03958001	S - 7	52
CJ04115001	M1 - 11	40
	Wa	65
CJ04230001	S - 11	52
CJ04303001	S - 15	52
CJ04388001	S - 13	52
CJ04488001	S - 9	52
CJ80991001	S - 1	52
CS00400000	F - 52	24
CS00470000	Q - 16	48
CS00705001	J - 61	34
CS02429201	E - 17	22
CS02445001	A - 34	2
CS02652001	J - 11	32
CS02778002	Z - 44	62
CS02787002	Z - 45	62
CS03677001	K - 23	36
CS04109001	Z - 35	62
CS04159000	J - 12	32
	L - 10	38
	Q - 19	48
	Q - 21	48
CS04891000	P - 8	46
CS06706001	Z - 11	62
CS07350002	A - 28	2
CS07459100	F - 15	24
	F - 22	24
CS07783001	Z - 23	62
CS09043000	F - 27	24
CS09228000	P - 6	46

CODE	REF.NO	Page
CS10112001	D1 - 52	16
CS10268001	H - 27	30
CS10408000	R - 15	50
CS10438001	H - 18	30
CS10470101	K - 20	36
CS12441001	G - 29	28
	H - 35	30
CS12699000	G - 16	28
CS13399001	D1 - 58	16
CS15667001	Sp	66
CS16492101	Sp	66
CS17974001	Z - 114	64
CS17975100	Z - 115	64
CS20164001	A - 33	2
	A - 42	2
CS20356001	C1 - 26	6
	D2 - 11	18
	D2 - 52	18
CS23418001	C2 - 62	10
CS23418002	H - 15	30
CS23651001	B - 8	4
	B - 11	4
	B - 14	4
	B - 17	4
	B - 44	4
	D1 - 5	16
	D1 - 15	16
	E - 8	22
	H - 39	30
	J - 2	32
	J - 26	32
CS23849001	C2 - 36	8
	C3 - 38	12
	C4 - 21	14
CS25235001	B - 15	4
CS25279001	K - 14	36
CS25310101	D1 - 37	16
	F - 69	26
	J - 68	34
CS25454001	K - 13	36
CS25456001	K - 4	36
CS25475101	J - 33	32
CS25634101	R - 12	50
CS31032001	G - 11	28
	H - 34	30
CS32462001	D1 - 44	16
	J - 24	32
	J - 31	32
	J - 40	32
CS32465001	J - 22	32
	J - 38	32
CS32557000	E - 43	22
CS35079000	D2 - 35	18
CS36007001	Z - 79	64
CS36260000	T - 5	54
	V2 - 21	60
CS36475000	A - 29	2
CS36924002	A - 30	2
	Wa	65
CS37037001	Z - 52	62
	Z - 56	62
CS37038001	Z - 51	62
CS37059001	M1 - 13	40

CODE	REF.NO	Page
CS37059001	Wa	65
CS37060001	A - 32	2
	Wa	65
CS38168001	T - 3	54
CS38170001	T - 4	54
	V2 - 17	60
CS38174000	T - 6	54
	V2 - 18	60
CS38175001	T - 7	54
CS38175101	V2 - 19	60
CS38176101	T - 8	54
	V2 - 20	60
CS38265000	F - 46	24
CS38648001	Z - 34	62
CS38713100	B - 33	4
CS39116100	P - 3	46
CS40214001	Ga	68
CS40574209	Z - 29	62
CS41205001	K - 3	36
CS41206001	K - 2	36
CS42446001	A - 37	2
	C2 - 39	8
	C2 - 43	8
	C2 - 60	8
CS42843001	Sp	67
	Ga	68
CS42844001	Ga	68
CS42845001	Ga	68
CS42846001	Ga	68
CS42847001	Ga	68
CS42848001	Ga	68
CS42849101	Ga	68
CS43225000	V2 - 4	60
CS43236009	R - 9	50
CS43674000	R - 10	50
CS43675000	R - 11	50
CS44010001	A - 40	2
CS44483001	Z - 83	64
CS44484001	Z - 84	64
CS44485001	Z - 88	64
CS44633001	Z - 12	62
	Sp	66
CS44924001	F - 57	24
CS46903001	J - 19	32
CS47307001	F - 59	24
CS48189000	F - 29	24
CS48664001	Sp	66
CS49448001	Ga	68
CS49484000	M1 - 9	40
CS49957000	F - 36	24
CS49982000	F - 28	24
CS49992000	F - 19	24
CS50529000	F - 21	24
CS51282101	Z - 32	62
CS51283001	Z - 30	62
CS53175000	F - 24	24
CS53982000	P - 23	46
CS55479001	C4 - 13	14
	Z - 129	64
CS55482001	C3 - 40	12
	C4 - 23	14
CS55484002	C2 - 42	8
	C3 - 50	12

CODE	REF.NO	Page
CS55484002	C3 - 55	12
	C4 - 39	14
	C4 - 44	14
	J - 13	32
CS55485001	C3 - 45	12
	C4 - 28	14
	C4 - 33	14
	K - 25	36
CS55663001	Z - 16	62
CS59221201	Sp	66
CS59886001	E - 29	22
CSA0792001	A - 31	2
	Wa	65
CSA0793001	A - 31	2
	Wa	65
CSA1174001	D1 - 49	16
CSA1175001	D1 - 50	16
CSA1645019	Sp	67
CSA1752016	Sp	67
CSA1890201	Sp	66
CSA1967001	K - 11	36
CSA1984001	H - 12	30
CSA1988001	H - 26	30
CSA1994101	H - 31	30
CSA2161001	D1 - 28	16
CSA2173201	Sp	66
CSA2195001	D1 - 54	16
CSA2287001	K - 15	36
CSA2663001	D1 - 40	16
CSA2958001	B - 20	4
CSA2972001	C2 - 22	8
CSA3200101	A - 23	2
CSA3206001	B - 5	4
	B - 9	4
CSA3224001	B - 31	4
CSA3226001	E - 1	22
CSA3227001	D1 - 42	16
	E - 2	22
CSA3228101	E - 3	22
CSA3231001	C3 - 13	12
	C3 - 31	12
	C4 - 18	14
	E - 5	22
CSA3233001	E - 7	22
CSA3238101	E - 14	22
CSA3241001	E - 19	22
CSA3242001	F - 56	24
CSA3244001	F - 1	24
CSA3246001	F - 30	24
CSA3250001	G - 1	28
CSA3254001	G - 8	28
CSA3255001	G - 10	28
CSA3256001	G - 17	28
CSA3257101	Sp	67
CSA3258001	G - 21	28
CSA3264001	A - 17	2
CSA3274101	F - 58	24
CSA3280001	F - 31	24
CSA3283101	E - 40	22
CSA3284101	E - 32	22
CSA3290001	H - 2	30
CSA3291001	H - 4	30
CSA3293001	H - 11	30

CODE	REF.NO	Page
CSA3294001	H - 14	30
CSA3295001	H - 16	30
CSA3296001	H - 21	30
CSA3297001	H - 22	30
CSA3298001	H - 28	30
CSA3299001	H - 29	30
CSA3301101	J - 1	32
CSA3306001	A - 26	2
	J - 15	32
	L - 16	38
CSA3307001	J - 8	32
CSA3309101	J - 16	32
CSA3310001	J - 17	32
CSA3311001	J - 18	32
CSA3312001	J - 28	32
CSA3313101	J - 29	32
CSA3315001	J - 21	32
CSA3317001	J - 36	32
CSA3319101	J - 42	32
CSA3320101	J - 46	32
CSA3321001	J - 47	32
CSA3324001	J - 51	32
CSA3325001	J - 52	32
CSA3327101	J - 55	32
CSA3330101	J - 58	34
CSA3334001	J - 62	34
CSA3335001	J - 63	34
CSA3336001	Ga	68
CSA3336101	Sp	66
CSA3347001	L - 11	38
CSA3348001	L - 14	38
CSA3349001	L - 15	38
CSA3384001	Z - 99	64
CSA3385001	Z - 101	64
CSA3387001	Z - 118	64
CSA3392001	Z - 98	64
CSA3395001	Z - 97	64
CSA3438001	D2 - 16	18
CSA3441001	D2 - 43	18
	D2 - 48	18
	D3 - 22	20
CSA3481001	Q - 7	48
CSA3499001	B - 2	4
CSA3503201	F - 8	24
CSA3504201	F - 9	24
CSA3519101	T - 1	54
CSA3528001	B - 26	4
	J - 69	34
CSA3540001	Z - 7	62
	Z - 106	64
CSA3581001	M1 - 14	40
CSA3707001	C2 - 53	8
	C2 - 58	8
CSA3720001	M1 - 2	40
CSA3722001	M1 - 8	40
CSA3739301	M1 - 6	40
CSA3744001	M1 - 7	40
CSA3755201	M2 - 1	42
CSA3762001	M2 - 5	42
CSA3765001	M2 - 2	42
CSA3766001	M2 - 3	42
CSA3767001	M2 - 4	42
CSA3768001	M2 - 6	42

CODE	REF.NO	Page
CSA3769001	M2 - 7	42
CSA3770001	M2 - 8	42
CSA3771001	M2 - 9	42
CSA3789101	N - 11	44
CSA3794001	M2 - 10	42
CSA3795001	M2 - 11	42
CSA3796001	M1 - 15	40
CSA3797001	M1 - 4	40
CSA3806001	M1 - 10	40
CSA3808001	M1 - 3	40
CSA3809001	N - 8	44
CSA3812001	N - 7	44
CSA3813001	N - 1	44
CSA3816001	N - 6	44
CSA3819001	N - 3	44
CSA3822001	N - 2	44
CSA3823001	N - 5	44
CSA3824001	N - 14	44
CSA3825001	N - 4	44
CSA3826001	N - 9	44
CSA3827001	N - 10	44
CSA3828001	N - 13	44
CSA3831001	R - 2	50
CSA3833101	R - 3	50
CSA4104001	Z - 92	64
CSA4143001	G - 15	28
CSA4146001	G - 28	28
CSA4146101	Sp	67
CSA4171001	H - 5	30
CSA4172001	B - 4	4
CSA4173001	B - 4	4
CSA4174001	B - 4	4
CSA4175001	B - 4	4
CSA4177001	B - 10	4
CSA4178001	B - 13	4
CSA4179001	B - 6	4
CSA4180001	B - 7	4
CSA4199001	E - 18	22
CSA4224001	C2 - 64	10
	D2 - 58	18
	D3 - 28	20
CSA4302001	D1 - 9	16
CSA4333001	G - 3	28
CSA4354001	J - 56	32
CSA4510001	N - 12	44
CSA4518001	J - 59	34
CSA4519001	J - 60	34
CSA4545001	J - 43	32
CSA4546001	J - 35	32
CSA4556001	M1 - 5	40
CSA4563001	R - 4	50
CSA4594001	A - 1	2
CSA4596001	A - 3	2
CSA4597001	A - 6	2
CSA4598001	A - 8	2
CSA4600001	A - 10	2
CSA4601001	A - 12	2
CSA4603101	A - 14	2
CSA4604001	A - 25	2
CSA4605001	A - 36	2
CSA4606001	B - 1	4
CSA4608101	B - 12	4
CSA4609101	B - 16	4

CODE	REF.NO	Page
CSA4622001	B - 28	4
CSA4624001	B - 42	4
CSA4626001	B - 37	4
CSA4627001	B - 38	4
CSA4628001	B - 39	4
CSA4629001	B - 40	4
CSA4630001	B - 45	4
CSA4635101	C1 - 4	6
CSA4636101	C1 - 7	6
CSA4637001	C1 - 2	6
CSA4638001	C1 - 18	6
CSA4639001	C1 - 14	6
CSA4640001	C1 - 12	6
CSA4641001	C1 - 9	6
CSA4642001	C1 - 22	6
CSA4643001	C1 - 25	6
CSA4647001	C1 - 27	6
	C2 - 4	8
	C2 - 7	8
	C2 - 14	8
	D2 - 27	18
	D3 - 10	20
CSA4648001	C1 - 28	6
CSA4649001	C1 - 11	6
CSA4650001	C1 - 30	6
CSA4651101	C1 - 32	6
CSA4652101	C1 - 33	6
CSA4653001	C2 - 2	8
CSA4654001	C2 - 5	8
CSA4655101	C2 - 9	8
	C2 - 15	8
CSA4658001	C2 - 11	8
CSA4659001	C2 - 12	8
CSA4661001	C2 - 13	8
CSA4662001	C2 - 17	8
CSA4663001	C2 - 18	8
CSA4664001	C2 - 19	8
CSA4665001	C2 - 20	8
CSA4666001	B - 30	4
CSA4667101	C2 - 24	8
CSA4671001	C2 - 25	8
CSA4672001	C2 - 26	8
CSA4673001	C2 - 32	8
CSA4675201	C2 - 34	8
CSA4676001	C2 - 38	8
CSA4677101	C2 - 35	8
CSA4679101	C2 - 44	8
CSA4680101	C2 - 45	8
CSA4681001	C2 - 46	8
CSA4682001	C2 - 47	8
CSA4684001	C2 - 51	8
	C2 - 56	8
CSA4686101	C3 - 1	12
	C4 - 1	14
CSA4687101	C3 - 2	12
CSA4688001	C3 - 4	12
CSA4689001	C3 - 5	12
CSA4690001	C3 - 7	12
CSA4691001	C3 - 8	12
CSA4692001	C3 - 9	12
	C3 - 27	12
	C4 - 14	14
CSA4693001	C3 - 16	12

CODE	REF.NO	Page
CSA4694001	C3 - 18	12
CSA4695001	C3 - 20	12
CSA4696001	C3 - 15	12
CSA4697001	C3 - 17	12
CSA4698001	C3 - 21	12
CSA4699001	C3 - 33	12
CSA4700001	C3 - 22	12
CSA4701001	C3 - 24	12
CSA4702001	C3 - 25	12
CSA4703001	C3 - 26	12
CSA4706101	C3 - 43	12
	C4 - 26	14
CSA4708001	C3 - 44	12
CSA4709001	C3 - 48	12
	C4 C31	14
	C4 C36	14
CSA4712001	C3 C41	12
	C4 C24	14
CSA4714001	C3 - 42	12
	C4 - 25	14
CSA4715001	C3 - 54	12
	C4 - 43	14
CSA4717001	C4 - 2	14
CSA4719001	C4 - 5	14
CSA4720001	C4 - 7	14
CSA4721001	C4 - 8	14
CSA4722001	C4 - 10	14
CSA4723001	C4 - 11	14
CSA4724001	C4 - 12	14
CSA4725001	C4 - 27	14
CSA4726001	C4 - 32	14
CSA4729001	D2 - 1	18
CSA4731001	D2 - 3	18
CSA4734001	D2 - 4	18
CSA4736001	D2 - 6	18
CSA4737001	D2 - 9	18
CSA4738001	D2 - 15	18
CSA4739001	D2 - 17	18
CSA4741101	D2 - 18	18
	D3 - 1	20
CSA4742001	D2 - 19	18
	D3 - 2	20
CSA4743001	D2 - 24	18
	D3 - 7	20
CSA4744001	D2 - 26	18
	D3 - 9	20
CSA4745001	D2 - 31	18
	D3 - 14	20
CSA4746001	D2 - 34	18
CSA4747001	D2 - 38	18
	D3 - 17	20
CSA4748001	D2 - 40	18
	D3 - 19	20
CSA4750001	D2 - 47	18
CSA4752001	D2 - 53	18
CSA4753001	D2 - 55	18
	D3 - 26	20
CSA4757101	D3 - 33	20
CSA4759001	D1 - 1	16
CSA4760001	D1 - 2	16
CSA4761001	D1 - 7	16
CSA4762001	D1 - 8	16
CSA4763001	D1 - 3	16

CODE	REF.NO	Page
CSA4764001	D1 - 11	16
CSA4765001	D1 - 13	16
CSA4766001	D1 - 16	16
CSA4767001	D1 - 17	16
CSA4768001	D1 - 18	16
CSA4769101	D1 - 19	16
CSA4770001	D1 - 21	16
CSA4771001	D1 - 27	16
CSA4772001	D1 - 22	16
CSA4773001	D1 - 23	16
CSA4775001	D1 - 38	16
CSA4776001	D1 - 43	16
CSA4777001	D1 - 26	16
CSA4778001	D1 - 47	16
CSA4779001	D1 - 32	16
CSA4780001	D1 - 35	16
CSA4781001	D1 - 33	16
CSA4782001	E - 4	22
CSA4783101	E - 10	22
CSA4785001	F - 2	24
CSA4786101	F - 7	24
CSA4787001	F - 4	24
CSA4788001	F - 11	24
CSA4789101	F - 32	24
CSA4791101	F - 37	24
CSA4795001	H - 1	30
CSA4796001	H - 20	30
CSA4797101	H - 38	30
CSA4798001	J - 3	32
CSA4799001	J - 14	32
CSA4801001	J - 37	32
CSA4802001	J - 53	32
CSA4806001	K - 6	36
CSA4811001	Sp	67
	Ga	68
CSA4816001	V1 - 2	58
CSA48160E1	V1 - 2	58
CSA4817001	V1 - 3	58
CSA4818001	V1 - 4	58
CSA4819001	V1 - 6	58
CSA4820201	C2 - 50	8
CSA4823101	C2 - 55	8
CSA4824001	Q - 10	48
CSA4826201	D2 - 21	18
	D3 - 4	20
CSA4828001	D2 - 22	18
	D3 - 5	20
CSA4830001	Q - 5	48
CSA4834001	R - 1	50
CSA4836001	R - 7	50
CSA4837001	R - 5	50
CSA4841001	R - 6	50
CSA4842001	Z - 1	62
CSA4844001	Z - 4	62
CSA4845001	Z - 107	64
CSA4846001	Z - 108	64
CSA4847001	Z - 112	64
CSA4852001	C4 - 47	14
CSA4853001	D1 - 39	16
CSA4855001	L - 1	38
CSA4863001	C3 - 37	12
	C4 - 20	14
CSA4864001	C3 - 39	12

CODE	REF.NO	Page
CSA4864001	C4 - 22	14
CSA4866101	C3 - 49	12
CSA4868101	C4 - 37	14
CSA4869101	C4 - 38	14
CSA4870101	C4 - 45	14
CSA4871101	C4 - 46	14
CSA5072001	F - 25	24
CSA5134001	V2 - 12	60
CSA5135001	J - 4	32
CSA5157001	J - 57	34
CSA5158001	B - 47	4
CSA5164001	U - 1	56
CSA5165001	U - 2	56
CSA5166001	U - 3	56
CSA5167001	U - 7	56
CSA5168001	U - 6	56
CSA5170001	U - 4	56
CSA5172001	U - 5	56
CSA5191001	P - 15	46
CSA5192001	P - 30	46
CSA5193001	V1 - 1	58
CSA51930E1	V1 - 1	58
CSA5194001	V1 - 7	58
CSA5201001	V2 - 1	60
CSA52010E1	V2 - 1	60
CSA5202001	V2 - 2	60
CSA52020E1	V2 - 2	60
CSA5203001	V2 - 5	60
CSA5204001	V2 - 8	60
CSA5205001	V2 - 10	60
CSA5206001	V2 - 11	60
CSA5208001	K - 1	36
CSA5210001	Q - 11	48
CSA5213001	K - 24	36
CSA5214001	Q - 12	48
CSA5217001	K - 5	36
CSA5218001	K - 8	36
CSA5219001	K - 17	36
CSA5221001	Sp	66
	Ga	68
CSA5222001	Ga	68
CSA5229101	C1 - 1	6
CSA5230001	B - 50	4
CSA5251001	Z - 109	64
CSA5261001	Q - 13	48
CSA5281001	P - 1	46
CSA5282001	P - 5	46
CSA5283001	P - 4	46
CSA5285001	P - 9	46
CSA5286001	P - 12	46
CSA5288001	P - 24	46
CSA5289001	P - 2	46
CSA5290001	P - 22	46
CSA5292101	F - 23	24
CSA5294001	F - 6	24
CSA5300001	D1 - 51	16
CSA5301001	D1 - 53	16
CSA5339101	F - 54	24
CSA6038001	T - 2	54
CSA6087001	F - 17	24
CSA6108001	B - 35	4
CSA6182001	B - 19	4
CSA6194001	A - 39	2

索引 / INDEX

CODE	REF.NO	Page
CSA6207001	A - 18	2
CSA6210001	D2 - 42	18
	D3 - 21	20
CSA6211001	F - 43	24
CSA6216001	E - 12	22
CSA6220001	E - 16	22
CSA6260001	F - 51	24
CSA6261001	Z - 128	64
CSA6263001	F - 50	24
CSA6272001	A - 15	2
CSA6273001	J - 70	34
CSA6306001	C2 - 61	8
CSA6359001	C2 - 29	8
CSA6360001	C2 - 30	8
CSA6361001	C2 - 31	8
CSA6364001	M1 - 1	40
CSA6389001	L - 9	38
CSA6391001	G - 5	28
CSA6397001	J - 62	34
CSA6398001	J - 62	34
CSA6405001	P - 17	46
CSA6405002	P - 28	46
CSA6406001	P - 18	46
CSA6406002	P - 29	46
CSA6407001	P - 19	46
CSA6434001	C2 - 40	8
CSA6435001	C2 - 41	8
CSA6441001	A - 41	2
CSA6450101	C2 - 65	10
CSA6451101	C2 - 67	10
CSA6495001	V2 - 16	60
CSA64950E1	V2 - 16	60
CSA6560101	Q - 20	48
CSA6572001	F - 62	26
CSA6573001	P - 10	46
CSA6576001	F - 16	24
CSA6577001	F - 60	26
CSA6578001	F - 26	24
CSA6579001	F - 53	24
CSA6580001	F - 14	24
CSA6581001	F - 63	26
CSA6582001	F - 67	26
CSA6583001	F - 64	26
CSA6584001	F - 68	26
CSA6593001	F - 13	24
CSA6628001	V2 - 3	60

TC-1310G

TC-2210G

ELECTRONIC PATTERN SEWING MACHINE
ELEKTRONISCHER GROSSFELD-RIEGELAUTOMAT

This machine may only be operated by adequately trained operators only after having completely read and understood the instruction manual.

Parts are subject to changes in design without prior notice.

Certificate of the international ISO9001 | Certificate of the ISO14001 | Certificate of the international CE | Certificate for Ecolabelling Product | Certificate for Energy Conservation Product

XI'AN TYPICAL INDUSTRIES CO., LTD.
No. 335, South Taibai Road
Xi'an 710068, P.R.China
Tel.: +86-29-88279093 // 88279150 // 88279151
Fax: +86-29-88249715 // 88245215

E-mail: tic@chinatypical.com
www.chinatypical.com

XI´AN TYPICAL EUROPE GmbH
Hertelsbrunnenring 9
D-67657 Kaiserslautern
Tel.: +49 (0)631 316019-0
Fax: +49 (0)631 316019-11

E-mail: sales@typical-europe.com
www.typical-europe.com

TC-1310G | TC-2210G – EN – 11-2012