TYPICAL

GC6716MD/HD/BD

SINGLE NEEDLE DIRECT DRIVE NEEDLE FEED LOCKSTITCH SEWING MACHINE

INSTRUCTION BOOK / PARTS CATALOGUE

※MAIN TECHNICAL DATA

Application	Commom materials	Thick materials	Thick materials
Sewing speed	4500spm	3500spm	3000spm
Max. Stitch length	4 mm	5 mm	
Presser foot lifting height	6-11mm		
Rotating shuttle	Standard automatic oiling	Thick materials automatic oiling	Twice automatic oiling
Needle	DB×1 11#-16#	DP ×5 18#-22#	

1.INSTALL THE MAGNET

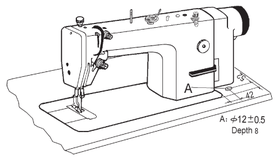

For safty,pedal should be no response when machine overturned.To realize it,a magnet with rubber cover installed into hole A. Note that S-ploes must be upward.

2.MAXIMUM SPEED ADJUSTMENT

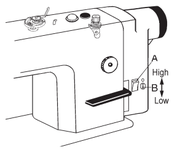

Push switch A,lighting lamp indicate power on.Turn the knob B to adjust the maximun speed, upwards to high and downwards to low.

3.ROTATING HOOK OIL AMOUNT ADJUSTMENT

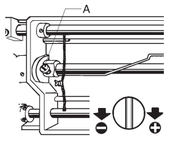

Adjust the oil amount of the rotating hook by turning the oil amount adjusting screw (A). Turn the screw(A) clockwise (in the "+" direction) to increase the oil amount ; turn it counter-clockwise (in the "-" direction) to decrease the oil amount.

4.NEEDLE INSTALLATION

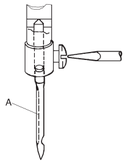

Turning the balance wheel to lift the needle bar to the upper end of its stroke. Loosen the needle clamp screw while keeping the long groove of the needle leftward, fully insert the needle shank up to the bottom of the needle socket, then tighten the needle clamp screw.
Note:please take the drive in our motor cover accessory bag to operate.

5.CONNECTION OF THE CLUTCH LEVER WITH THE PEDAL

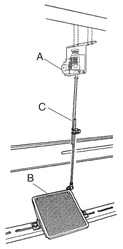

(1) Install speed gorernor A, link speed gorernor A and pedal B with tie barc,keep tie bar C vertical.
(2) The optimum tilt angle of pedal is approximately 15 deg.

6.ADJUST THE OPENING TIME OF THE TENSION DISCS

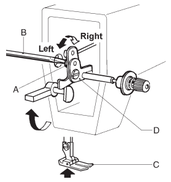

Within the presser foot lift range , the opening time of the tension discs can be adjusted as follows:
(1)Remove the rubber plug from the back of the arm and Loosen the screw (A) of the knee lift level (left)
(2)Move the tension releasing cam (D) leftward for earlier opening or rightward for later opening.It will facilitate the adjustment if putting a lifting high block under the presser foot lift.

7.ADJUST THE PRESSURE OF PRESSER FOOT

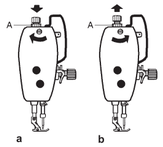

Pressure of the presser foot is adjusted in accordance with thickness of materials to be sewn.
First loosen the lock nut (A) , for heavy materials, turn the pressure regulating thumb screw as shown in Fig.(a) to increase the pressure , while for light materials , turn the pressure regulating thumb screw as shown in Fig.(b) to decrease the pressure , the tighten the lock nut (A).
The pressure of the presser foot is recommended to be less as along as normal feeding is ensured.

8.ADJUSTMENT OF STITCH LENGTH AND REVERSE FEEDING

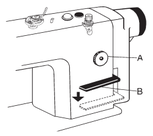

The stitch length can be adjusted by turning the dial knob(A). The figures on the face (B) of the dial show the stitch length in mm. The reverse feed level must be depressed by another hand while adjusting the stitch length (B).The reverse feeding start when the reverse feed lever (B) is depressed, the machine will feed forward again if the reverse feed level is released.

9.THREADING

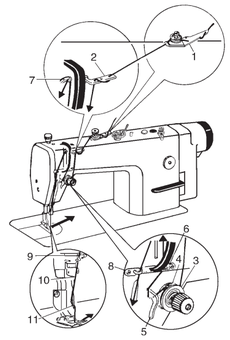

To thread the needle thread, raise the needle bar to the upper end of its stroke, lead the thread from the spool and perform. Threading as shown in To draw the bobbin thread, hold the end of the needle thread and turn the balance wheel to lower the needle bar and then lift it to its highest position. Pull the ends of needle thread and bobbin thread frontward under presser foot.

10.WINDING THE LOWER THREAD

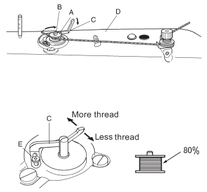

Turn on the power switch.Place the bobbin (A) onto the bobbin winder shaft (B).Wind the thread several times around the bobbin (A) inthedirection indicated by the arrow.Push the bobbin presser arm(C) toward the bobbin (A).Raise the presser foot with the lifting lever .Depress the treadle. Lower thread winding will then start. Once winding of the lower thread is completed, the bobbin presser arm (C) will return automatically.After the thread has been wound on ,remove the bobbin and cut the thread with the knife (D).
NOTE:
1.Loosen the screw (E) and mover the bobbin presser(C) to adjust the amount of thread wound onto the bobbin.
2.The amount of thread wound onto the bobbin should be a maximum of 80% of the bobbin capacity.

11.THREAD TENSION ADJUSTMENT

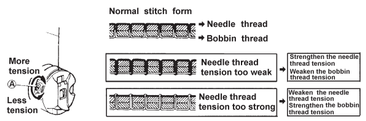

Thread tension should be determined in accordance with the stitch obtained by adjusting the tension of the bobbin thread and needle thaead.
The tension of the bobbin thread:to be adjusted by turning the tension spring regulating screw of the bobbin case,After adjusting , insert the bobbin into the bobbin case and hold the end of the thread from the bobbin case to hang the bobbin case, If the bobbin case falls slowly and evenly, the proper tension of the bobbin thread is obtained.
The tension of needle thread: to be adjusted by turning the thumb nut.

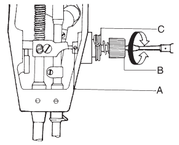

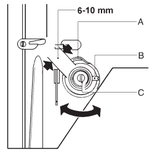

The stroke of the thread take-up spring runs from 6mm to 10mm , when sewing very thin fabrics, reduce the thread take-up spring tension and increase the thread take-up spring stroke , where as increase the thread take-up spring tension and reduce the thread take-up stroke when sewing very thick fabrics.
Adjusting the thread take-up spring tension : First loosen the set screw (A) , Turn the tension stud (B) counter-clockwise to decrease the tension of the thread take-up spring (c) to zero. Then turn the tension stud (B) clockwise till the spring (c) comes to the notch of the tension regulating bushing, and again turn the tension stud (B) halfway back (counter clockwise),After the adjustment, tighten the set screw (A).
Adjusting the thread take-up spring stroke: loosen the set screw (B) turn the stud (C) clockwise to increase the stroke or turn stud (C) counter-clockwise to decrease the stroke after the adjustment. tighten the set screw (B).

12.ADJUST THE SYNCHRONIZATION OF THE NEEDLE WITH ROTATING HOOK

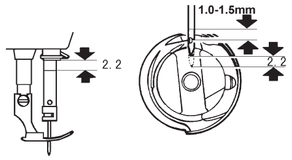

When lifting the needle bar from its lowest posi-tion of the stroke to the distance A, the hook point D of the bobbin should align with the center line of the needle and be 1.0-1.5 mm above upper end of the needle eye .

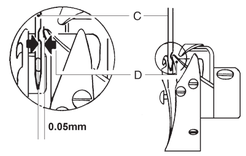

The clearance between the bottom of the needle notch and the hook tip should be 0.05 mm .

13.ADJUSTING THE POSITION OF FEED DOG AND NEEDLE

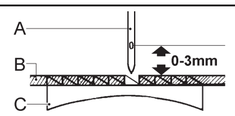

To adjust the feed dog position (C), first should release the two set screw (F) and tum around the balance wheel by hand. When the needle (A) point reaches the surface of the throat plate (B), the top of the feed dog (C) should be flush with the throat plate surface.

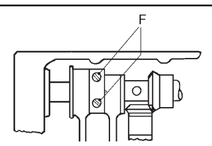

Loosen eccentric wheel screw,turn eccentric wheel and balance wheel separately to adjust the position of needle and feed doy .Tnen tighten the screw.

14.STITCH LENGTH ERROR ADJUSTMENT

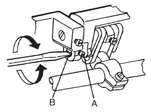

Loosen screw (A) to adjust the stitch length adjusting cam (B). Turn it rightward to narrow the stitch length as forward sewing, and widen it as reverse sewing; turn it leftward to widen the stitch length as forward sewing, and narrow it as reverse sewing .

15.FEED DOG HORIL ONTALLTY ADJUSTMENT

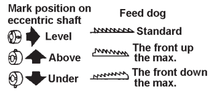

Heighten the front of feed dog to prevent fabric from wrinkling ,lower the front of feed dog to prevent fabric from defection, breaking of hook thread.

1

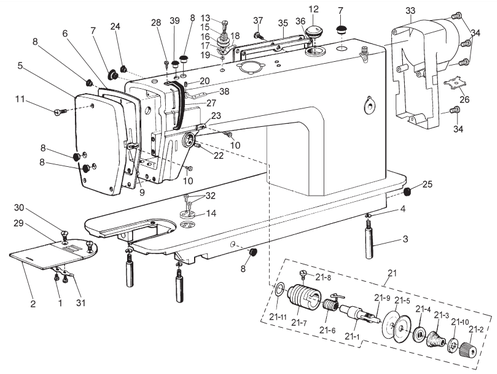

1.ARM AND BED MECHANISM

No.	Ref.No.	Description	Qt. M	Qt. H	Qt. B
1	022170003	Screw	2	2	2
2	022170001	Slide plate	1	1	1
3	048100005	Leg	3	3	3
4	S150601004	Spring washer	3	3	3
5	027100002--W	Face plate	1	1	1
6	027100003	Face plate gasket	1	1	1
7	022130003--V	Rubber plug(Φ19)	2	2	2
8	022130004--V	Rubber plug(Φ11.8)	6	6	6
9	022130005	Thread guide on face plate	1	1	
	078130001	Thread guide on face plate			1
10	022130006	Screw	2	2	2
11	022100006	Screw	3	3	3
12	022180001--V	Oil check window	1	1	1
13	022150001	Screw	1	1	1
14	057100008	Ruler plate	1	1	1
15	022150002	Tension spring for pretension	1	1	1
16	022150003	Thread tension disc	1	1	1
17	022150004	Pretension thread guide pad	2	2	2
18	S150620001	Spacer	1	1	1
19	022150005	Pretension thread guide	1	1	1
20	124100006	Screw	1	1	1
21	124130000--W	Thread tension bracket assy	1	1	1
21-1	022160001	Thread tension stud	1	1	1
21-2	124130001--W	Thread tension nut	1	1	1
21-3	124130002	Thread tension spring	1		
	048110001	Thread tension spring		1	1
21-4	022160004	Thread tension releasing disc	1	1	1
21-5	022160005	Thread tension disc	2	2	2
21-6	022160006	Thread take-up spring	1		
	048110002	Thread take-up spring		1	1
21-7	022160007	bushing	1	1	1
21-8	022160008	Screw	1	1	1
21-9	238100004	Thread tension rleasing pin	1	1	1
21-10	022160010	Stop disc	1	1	1
21-11	022160011	O-type ring	1	1	1
22	022100013	Set screw	1	1	1
23	022100014	Thread guide	1	1	
	078100005	Thread guide			1
24	022100015--V	Rubber plug(Φ8.8)	5	5	5
25	022100016	Rubber plug(Φ27)	1	1	1
26	238100009	All purpose screwdriver	1	1	1
27	BXF9768001	Thread take-up lever guard	1	1	1
28	022200004	Screw	1	1	1
29	027100004	Needle plate	1		
	027100104	Needle plate		1	1
30	022100020	Screw	2	2	2
31	022170002	Slide plate spring	1	1	1
32	124100004	Screw	2	2	2
33	238C12000	Motor cover	1	1	1
34	B048509294	Screw M5X18	4	4	4
35	022140001	Side plate	1	1	1
36	022140002	Washer	1	1	1
37	022100006	Screw	8	8	8
38	022100010	Thread guide	1	1	1
39	022100017--V	Rubber plug(Φ5.7)	1	1	1

2

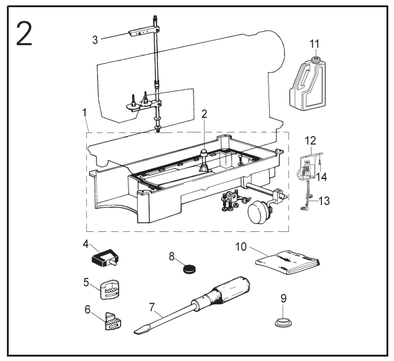

2.OIL RESERVOIR AND ACCESSORIES

No.	Ref.No.	Description	Qt. M	Qt. H	Qt. B
1	036C10001	Oil reservoir asm	1	1	1
2	165F01001	Knee lifter lifting pin	1	1	1
3	006F00030--W	Thread spool asm	1	1	1
4	022990000	cushion	2	2	2
5	022900009--V	Cushion(B)	2	2	2
6	022900010--V	Cushion(S)	2	2	2
7	W060401017	Screw drive(long)	1	1	1
8	W050103001	Magnet block	1	1	1
9	238C00006	Magnets	1	1	1
10	W060302036	Machine head cover	1	1	1
11	0229900017	Oil tank	1	1	1
12	238C14000	Governor	1	1	1
13	238C15000	Rod complete	1	1	1
14	S150221002	Wood screw M5x12	4	4	4

3

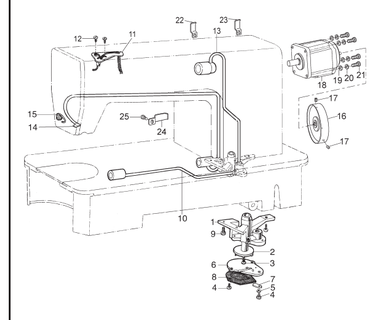

3.OIL PUMP AND MOTOR MECHANISM

No.	Ref.No.	Description	Qt. M	Qt. H	Qt. B
1	022800001	Oil pump	1	1	1
2	022800002	Oil pump impeller	1	1	1
3	022800003	Screw	1	1	1
4	022800004	Screw	3	3	3
5	S150601003	Springee washer 3	1	1	1
6	022800006	Oil pump fitting	1	1	1
7	022800007	Oil adjusting plate	1	1	1
8	022810000	Oil pump screen	1	1	1
9	022800009	Screw	3	3	3
10	036A20N	Oil pump for hook	1	1	1
11	027811000	Oil braid fitting plate	1	1	1
12	022700015	Screw	2	2	2
13	022840N	Oil pump for arm	1	1	1
14	027800002	Oil return pipe	1	1	1
15	036A00002	Oil filter holder	1	1	1
16	238710001	Hand wheel	1	1	1
17	S150215001	Screw M5x8	2	2	2
18	257700001	Motor	1		
	257A00001	Motor		1	1
19	B084050974	Flat Washer S5	4	4	4
20	B082050864	Spring Washer	4	4	4
21	B048509294	Screw M5x18	4	4	4
22	238C00008	Cord holder	1	1	1
23	238C00003	Cord holder	1	1	1
24	BXF8423009	Cord holder	1	1	1
25	022200019	Screw	1	1	1

XI'AN TYPICAL INDUSTRIES CO.,LTD.

Add: No.335 Taibai South Road,
Xi'an,P.R.China-710068
Tel :+86-29-88279091 88279150

Fax :+86-29-88249715 88245215
E-mail:typical@chinatypical.com
Http:www.chinatypical.com

2013.07.25 ①

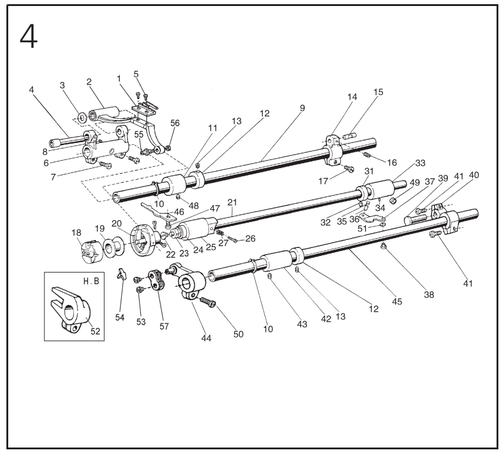

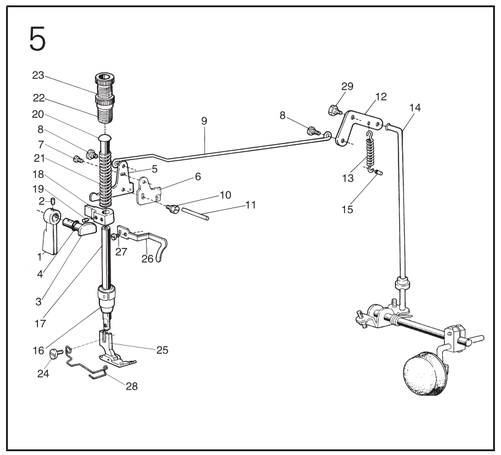

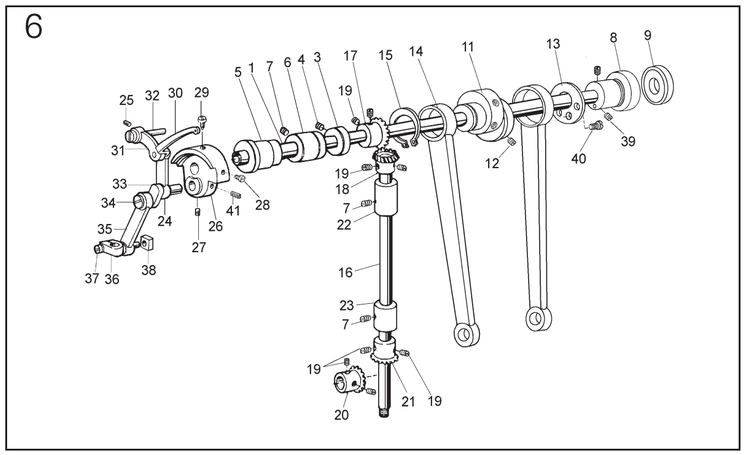

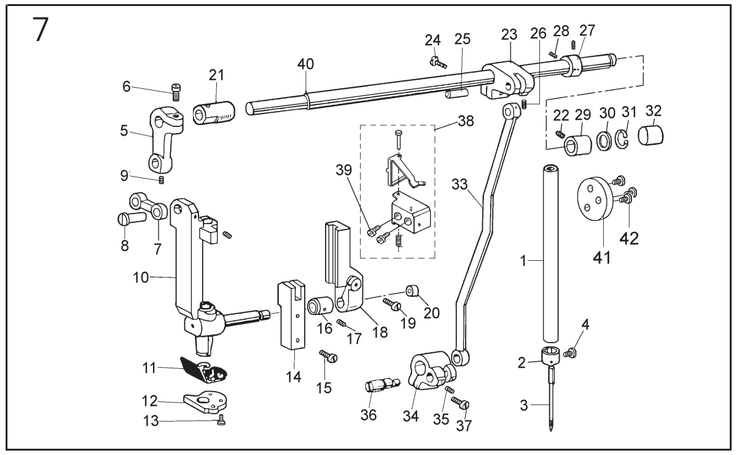

4.FEEDING AND FEED LIFTING AND ROTATING HOOK MECHANISM

No.	Ref.No.	Description	Qt.		
			M	H	B
1	027600002	Feed dog	1		
	027600101	Feed dog		1	1
2	027601000	Feed bar	1	1	1
3	022610006	Washer	1	1	1
4	036410002	Shaft for feed bar	1	1	1
5	022610004	Screw	2	2	2
6	022611001	Feed rock shaft crank	1	1	1
7	022612001	Screw	2	2	2
8	022200019	Screw	1	1	1
9	124600002	Feed rock shaft	1	1	1
10	S150617006	C-type stop ring 15	2	2	2
11	022600004	Bushing for feed rock shaft	1	1	1
12	022620001	Collar for feed rock shaft	2	2	2
13	022320002	Screw	4	4	4
14	036400003	Feed rock shaft crank(right)	1	1	1
15	036400204	Pin	1	1	1
16	036550005	Screw	1	1	1
17	022640003	Screw	1	1	1
18	027402000	Bobbin case complete	1	1	1
19	036400006	Bobbin	1	1	
	078400005	Bobbin			1
20	03643	Rotating hook complete	1		
	048410000	Rotating hook complete		1	
	027403000	Rotating hook complete			1
21	036440001	Hook shaft	1	1	
	120400001	Hook shaft			1
22	022411001	Filter screw	1	1	1
23	022411002	Filter	1	1	1
24	022400109	Oil seal	1	1	1
25	022400004	Hook shaft bushing(left)	1	1	1
26	022400005	Oil adjusting screw	1	1	1
27	022400006	Coil spring	1	1	1
31	022420001	Collar for hook shaft	1	1	1
32	022200009	Screw	2	2	2
33	036460001	Hook shaft bushing(right)	1	1	1
34	022430002	Oil pipe for hook shaft bushing	1	1	1
35	036400015	Plunger	1	1	1
36	036400016	Plunger spring	1	1	1
37	022400010	Guide plate	1	1	1
38	022820001	Screw	1	1	1
39	022640002	Hinge pin	1	1	1
40	048600006	Feed lifting rock shaft crank(R)	1	1	1
41	022600016	Screw	2	2	2
42	022600012	Bushing for feed lifting shaft(L)	1	1	1
43	022200002	Screw	1	1	1
44	022640001	Feed lifting rock shaft crank(L)	1	1	1
45	124600003	Feed lifting rock shaft	1	1	1
46	022400013	Hook positioner	1		
	048400002	Hook positioner		1	
	078400003	Hook positioner			1
47	022400015	Screw	1	1	1
48	022200009	Screw	1	1	1
49	022200002	Screw	1	1	1
50	022640003	Screw	1	1	1
51	S150601004	Washer	1	1	1
52	036484001	Feed lifting shaft crank		1	1
53	022600010	Screw	2		
54	022660002	Oil wick clamp	1		
55	022610009	Hinge	1		
56	022610008	Nut	1		
57	022660001	Feed stand link	1		

5.PRESSER FOOT MECHANISM

No.	Ref.No.	Description	Qt.		
			M	H	B
1	022710001--W	Presser bar lifter	1	1	1
2	B040600294	Screw	1	1	1
3	022700002	Presser bar lifting cam	1	1	1
4	S150651010	Oil seal(4.5×1.8G)	1	1	1
5	022721001	Knee lifter lever (left)	1	1	1
6	022722001	Tension relasing cam	1	1	1
7	022723000	Screw	1	1	1
8	022720002	Screw	2	2	2
9	238400002	Knee lifter rod	1	1	1
10	022700005	Screw	1	1	1
11	022700006	Thread releasing pin	1	1	1
12	022730001	Knee lifter lever (right)	1	1	1
13	022730002	Coil spring	1	1	1
14	022730003	Knee lifter connecting rod	1	1	1
15	022700008	Pin for spring	1	1	1
16	022700009	Bushing for presser bar	1	1	1
17	022700010	Presser bar	1	1	1
18	027700001	Presser bar guide bracket	1	1	1
19	022100013	Screw	1	1	1
20	022700012	Presser bar spring guide	1	1	1
	022700013	Presser bar spring	1		
21	048700002	Presser bar spring		1	1
22	022750001--W	Thumb screw	1	1	1
23	022750002--W	Lock nut	1	1	1
24	022700015	Screw	1	1	1
	027701000	Presser foot asm	1		
25	027701100	Presser foot asm		1	1
26	027100005	Thread guide	1	1	1
27	022200004	Screw	1	1	1
28	057700002	Presser foot spring	1	1	1
29	022730004	Screw	1	1	1

6.ARM SHAFT AND VERTICAL SHAFT THREAD TAKE-UP MECHANISM

No.	Ref.No.	Description	Qt.		
			M	H	B
1	257200001	Arm shaft	1	1	1
3	022320001	Collar for arm shart	1	1	1
4	022220003	Screw	2	2	2
5	022300003	bushing(left)	1	1	1
6	022300004	bushing(middle)	1	1	1
7	022200002	Screw	3	3	3
8	257200002	Bearing	1	1	1
9	238200004	oil seal	1	1	1
11	027300001	Eccentric whell	1	1	1
12	022200002	Screw	2	2	2
13	036300004	Spacer	1	1	1
14	022343001	rock shaft	1	1	1
15	022342001	Spacer	1	1	1
16	022350001	Vertical shaft	1	1	1
17	Z01800891	shaft	8	8	8
18	Z01800892	vertical shaft(upper)	1	1	1
19	022220003	Set screw	1	1	1
20	Z01800886	shaft	1	1	1
21	Z01800885	vertical shaft(lower)	1	1	1
22	022300111	bushing(upper)	1	1	1
23	022300112	Vertical shaft bushing(lower)	1	1	1
24	02221	Needle bar link asm	1		
	027210000	Needle bar link asm		1	
	027220000	Needle bar link asm			1
25	022100006	Screw	1	1	1
26	022220001	Needle bar crank	1	1	1
27	022220002	Screw	1	1	1
28	022200006	Screw	1	1	1
29	022200007	Screw	1	1	1
30	022211000	Thread take up lever asm	1		
	048211000	Thread take up lever asm		1	1
31	022210002	Thread take-up rod	1	1	1
32	022210003	Gemel shaft of thread take up lever	1	1	1
33	022210004	Pick line crank	1	1	1
	022210005	Needle roller bearings	2	2	2
34	022210006	Screw	1	1	1
35	022212000	Needle bar connecting rod assembly	1	1	1
36	022210008	Needle bar connector	1	1	1
37	022210009	Needle bar connector Screw	1	1	1
38	022200020	Slide block	1	1	1
39	BX87459009	Screw M6x6	2	2	2
40	165330001	Screw	3	3	3
41	022220003	Screw	1	1	1

7.NEEDLE FEED MECHANISM

No.	Ref.No.	Description	Qt.		
			M	H	B
1	153200001	Neddle bar	1	1	1
2	027A00002	Thread guide for neddle bar	1	1	1
3	S150901005	Needle	1		
	S150901003	Needle		1	1
4	022200017	Screw	1	1	1
5	027200001	Neddle bar pendulum	1	1	1
6	022600016	Screw	1	1	1
7	027200002	Neddle bar pendulum rod	1	1	1
8	027200003	Neddle bar pendulum rod pin	2	2	2
9	022100011	Screw	1	1	1
10	027201000	Neddle bar bracket asm	1		
	027201100	Neddle bar bracket asm		1	1
11	027200004	oil pad	1	1	1
12	027200005	Oil fixed plate	1	1	1
13	165330001	Screw	3	3	3
14	027200006	Neddle bar holder guide	1	1	1
15	022200019	Screw	1	1	1
16	027200007	Bushing	1	1	1
17	022100011	Screw	1	1	1
18	027200008	Neddle bar sliding block guide	1	1	1
19	022600016	Screw	1	1	1
20	027200009	Needle roller bearings	1	1	1
21	027200011	Vibrating shaft bushing (L)	1	1	1
22	022100011	Screw	1	1	1
23	027200013	Vibrating shaft crank	1	1	1
24	022612001	Screw	1	1	1
25	027200014	Pin	1	1	1
26	022100011	Screw	1	1	1
27	027200015	Collar	1	1	1
28	022320002	Screw	2	2	2
29	027200016	Vibrating shaft bushing (R)	1	1	1
30	027200017	Washer	1	1	1
31	S150617010	Retaining ring	1	1	1
32	2571000003	Rubber plug(Φ21.5)	1	1	1
33	027200019	Feed link (long)	1	1	1
34	027200020	Feed crank	1	1	1
35	022600016	Screw	1	1	1
36	027200021	Eccentric shaft	1	1	1
37	022100011	Screw	1	1	1
38	027A02000	Loose hinge line asm	1	1	1
39	022640003	Screw	2	2	2
40	027200012	Pendulum shaft	1	1	1
41	257100002	Pendulum shaft cover	1	1	1
42	S150203002	Screw M4x8	3	3	3

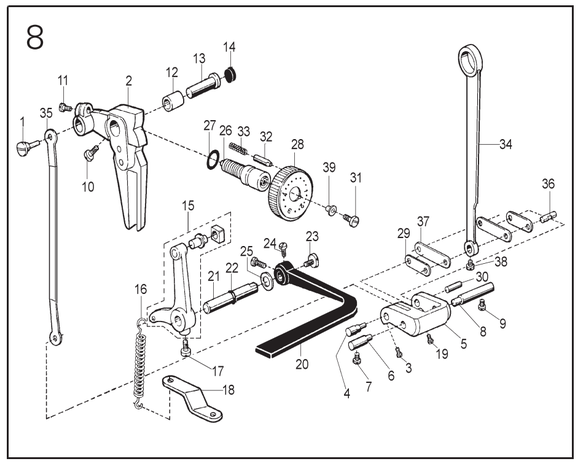

8.STITCH LENGTH REGULATING MECHANISM

No.	Ref.No.	Description	Qt.		
			M	H	B
1	036500001	Connecting stud	1	1	1
2	057500001	Feed regulator	1	1	1
3	036550008	Screw	1	1	1
4	036550009	Lever link eccentric shaft	1	1	1
5	036550010	Lever regulator	1	1	1
6	036580002	Pin(left)	1	1	1
7	022640003	Screw	1	1	1
8	036580001	Pin(right)	1	1	1
9	022640003	Screw	1	1	1
10	022540004	Screw of feed regulator	1	1	1
11	022200019	Screw	1	1	1
12	022500003	Feed regulator bushing	1	1	1
13	022500004	Feed regulator shaft	1	1	1
14	238300002	Rubber plug (Φ16)	1	1	1
15	022550001	Back tacking crank	1	1	1
	022551001	Slide block pin	1	1	1
16	057520001	Lever spring	1	1	1
17	022500013	Set screw	1	1	1
18	057500005	Bracket for spring	1	1	1
19	036550007	Screw	1	1	1
20	124500004--W	Backtacking lever	1	1	1
21	036531001	Backtacking lever shaft	1	1	1
22	S150651007	O-ring 6.3×1.8G	1	1	1
23	022540003	Screw	1	1	1
24	022540004	Screw	2	2	2
25	022500011	O- ring	1	1	1
26	257500001	Feed regulator screw	1	1	1
27	124510003	screw	1	1	1
28	027500001--W	Knob	1		
	124510001--w	Knob		1	1
29	036558001	Feed rock link	1	1	1
30	036550006	Pin	1	1	1
31	238300004	Screw	1	1	1
32	238300007	Stopper pin	1	1	1
33	022500009	Spring for stopper pin	1	1	1
34	036550002	Lever feed connecting rod	1	1	1
35	036550003	Feed regulator link	1	1	1
36	036400104	Sink shaft	1	1	1
37	036558002	Feed rock arm link	2	2	2
38	036550005	Screw	1	1	1
39	036540004--d	Bush	1	1	1

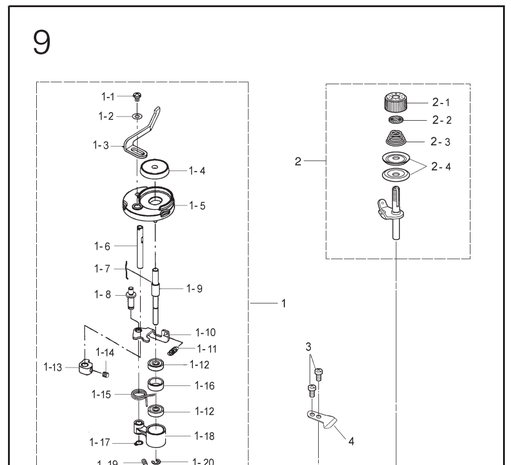

9.BOBBIN WINDER MECHANISM

No.	Ref.No.	Description	Qt.		
			M	H	B
1	207107000--W	Bobbin winder complete	1	1	1
1-1	S150237046	Screw M4X5	1	1	1
1-2	S150633007	Washer 4	1	1	1
1-3	207107015	Wrench	1	1	1
1-4	207107003	Bobbin support	1	1	1
1-5	207107004	Bobbin winder support	1	1	1
1-6	207107010	Bobbin winder cam shaft	1	1	1
1-7	207107002	Spring	1	1	1
1-8	207107012	Bobbin winder lever shaft	1	1	1
1-9	207107001	Bobbin winder shaft	1	1	1
1-10	207107014	Bobbin winder lever	1	1	1
1-11	207107005	Spring	1	1	1
1-12	S150866067	Bear 625ZZNR	2	2	2
1-13	207107011	Bobbin winder cam	1	1	1
1-14	S150224008	Screw M5X5	1	1	1
1-15	207107013	Spring	1	1	1
1-16	207107007	Bear bushing	1	1	1
1-17	W120607001	Retaining ting C6	1	1	1
1-18	207107006	Bobbin winder crank	1	1	1
1-19	S150224009	Screw M4x6	2	2	2
1-20	B062060768	Retaining ting E4	1	1	1
1-21	207107008	Bobbin winder wheel	1	1	1
1-22	207107009	Rubber ring	1	1	1
2	BXF9116009-W	Thread tension complete(S)	1	1	1
2-1	BX79078009	Nut	1	1	1
2-2	BX98669009	Washer	1	1	1
2-3	B900609089	Spring	1	1	1
2-4	B965664009	Tension disc	2	2	2
3	022830004	Screw SM3.57	2	2	2
4	001100009	Knife	1	1	1
5	022100013	Screw	1	1	1
6	BXF9118909	Screw M5x6	3	3	3